NITTO KOHKI

L01en

Linear-motor-driven Free Piston Pumps and other Pumps for various applications

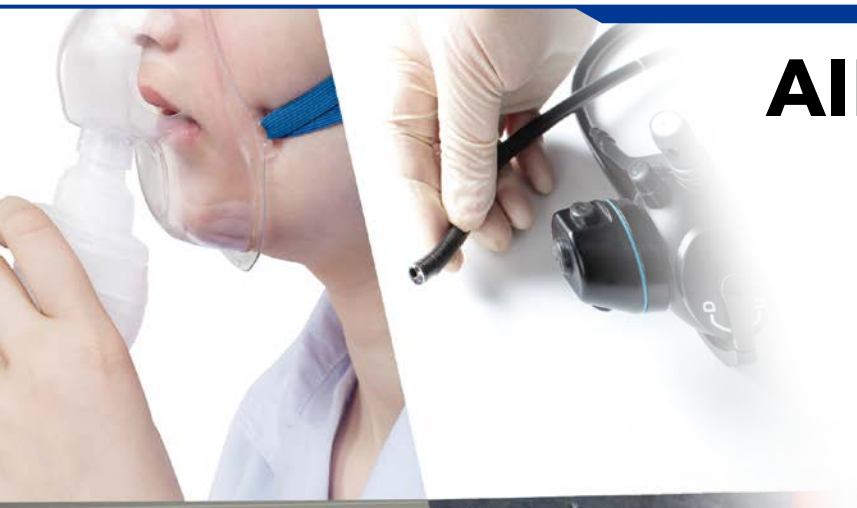

# AIR COMPRESSOR, VACUUM PUMP & LIQUID PUMP

GENERAL CATALOG

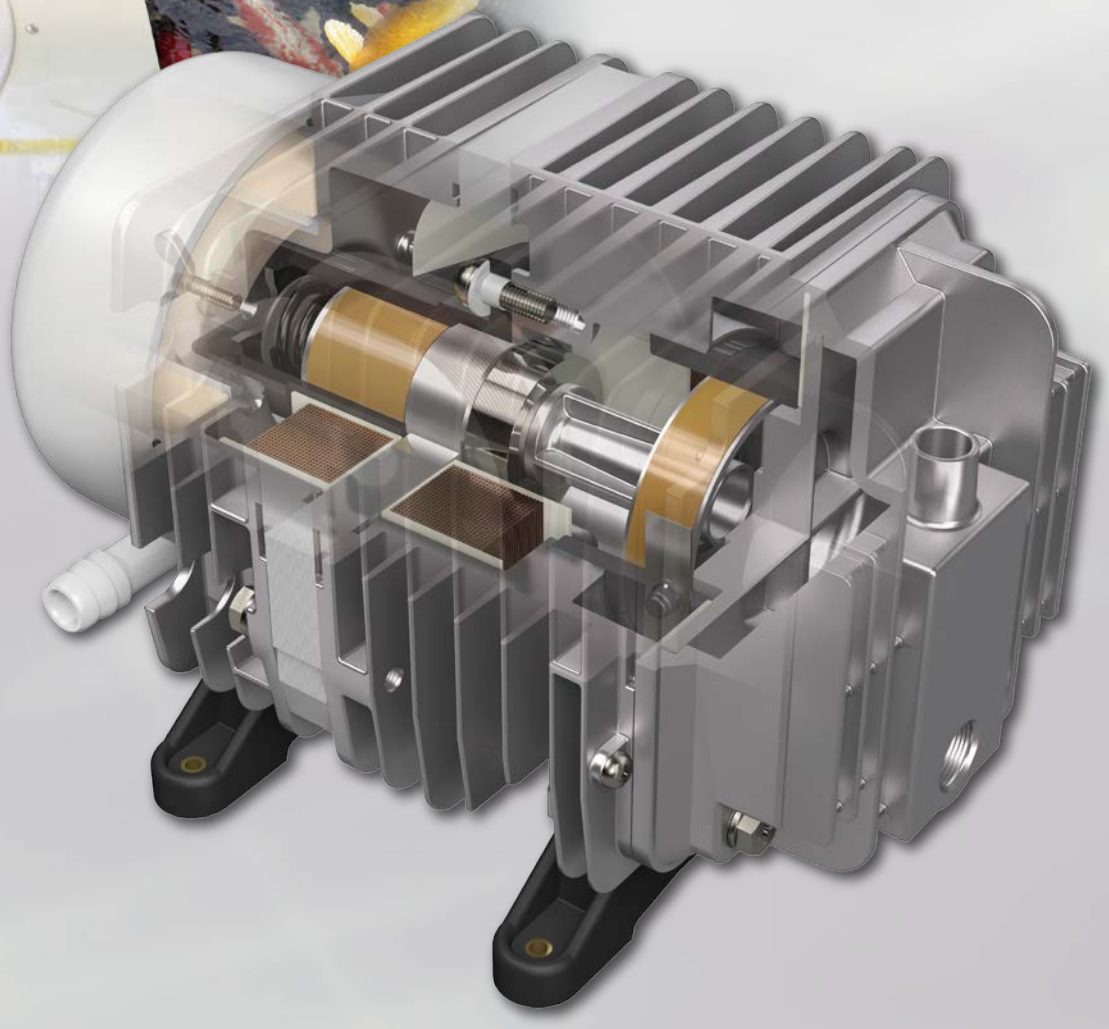

**Our air compressors and vacuum pumps are unique products featuring a Linear-motor-driven Free Piston System. Nitto Kohki has made available a complete series of air compressors and vacuum pumps that incorporate this revolutionary mechanism. These are quite appropriate as air sources or vacuum units for various pneumatically operated equipment and apparatus in advanced industries.**

## Linear-motor-driven Free Piston Mechanism

The Electro-magnet and return spring alternately drive the piston inside the cylinder, the mechanical resonance of which is synchronized with the input current cycle.
In a single mechanism, the piston combines the functions of two normally independent devices; the pump and the motor.

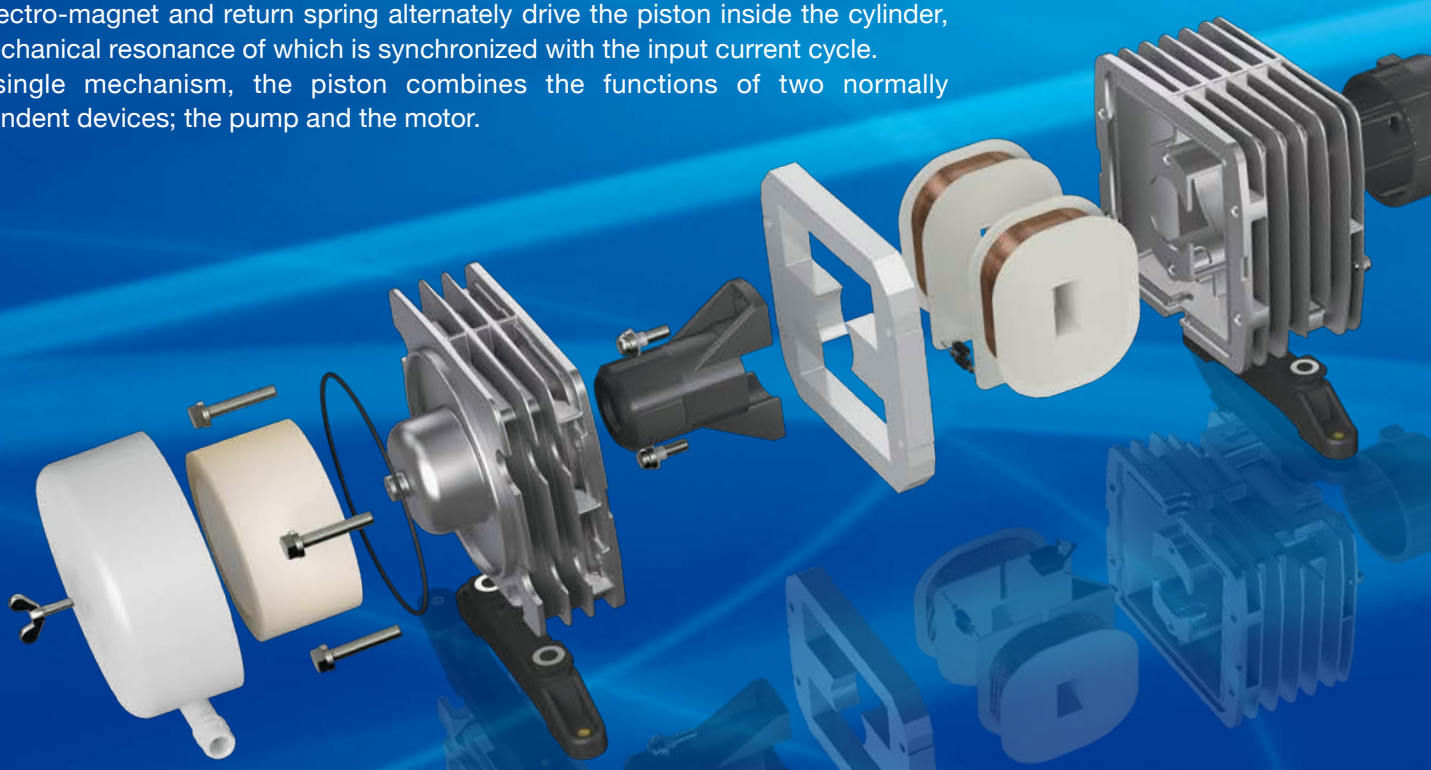

## Operating Principle

*1) Incorporated in AC models *2) Incorporated in DC models

A silicon diode*1 in between the coils or inverter*2 converts the full-wave input current into half-rectified current. In turn this activates and deactivates the electro-magnet, producing a smooth mechanically resonating action.

**A**

The energized electro-magnet attracts the piston, compresses the return spring, and draws air into the cylinder through the opened inlet valve.

**AC Power**(The effect of using a silicon diode) **DC Power**(The effect of using an inverter)

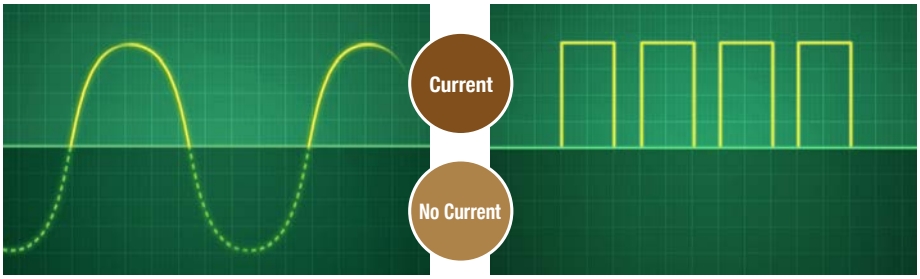


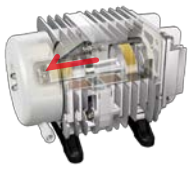

**B**

When the electro-magnet is de-energized, the return spring pushes the piston back, forcing the compressed air out of the cylinder through the now opened outlet valve.

Repeating the movements of A and B delivers the function of compressor or vacuum pump.

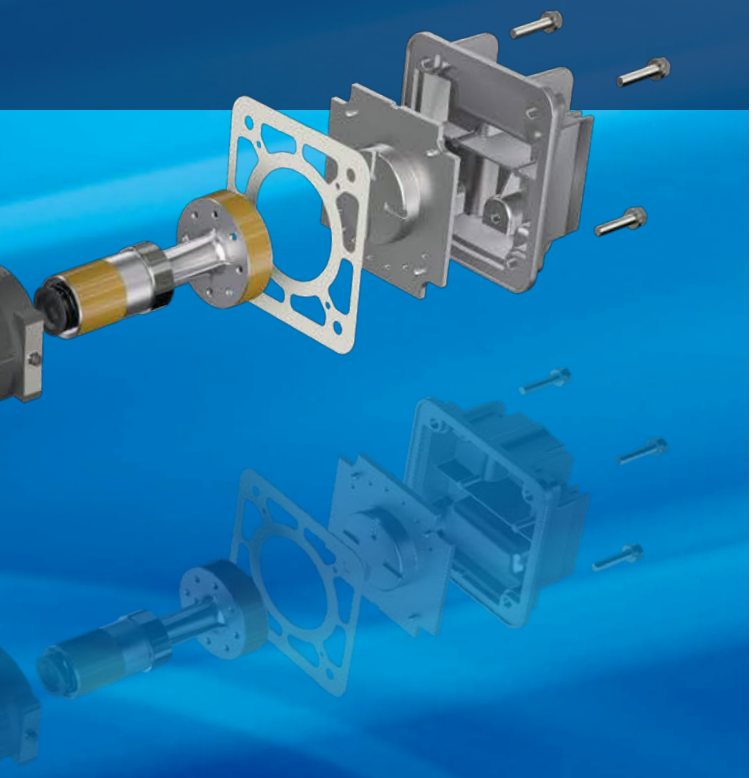

## Compact Integrated Design

This unique system enables the mechanical resonance of a single part. An incredibly compact, lightweight design is achieved by combining what are entirely independent functions in conventional pumps – the motor and the compressor – into a superior single, unified structure.

## Self-cooling Design

Cool intake air passes over the coils to reduce and control the rise in the pump's internal temperature. As a result of this feature, it is possible to almost completely seal the unit, thus improving the suppression of internal operating noise.

## Overpressure Control Mechanism

Should the output pressure exceed the rated value, the piston will automatically adjust to a shorter stroke. Simultaneously, power consumption will automatically reduce to prevent the motor from failing or being burnt out.

# Contents


| | Page |
|---|---|
| Series Selection | 3 |
| Conversion Tables | 6 |
| The mechanism and structure of Nitto Kohki pumps | 7 |
| Information found in the model name | 8 |
| Explanation of Technical Terms | 9 |
| The Key Design Features of the Linear-motor-driven Free Piston System | 11 |
| Safety Guide | 117 |

| | | |
|---|---|---|
| Linear Free Piston | **AC Linear Free Piston Compressor**<br>AC0102 / AC0201A / AC0301A / AC0401A / AC0602 / AC0901<br>AC0902 / AC0105 / AC0110 / AC0207 / AC0410A / AC0610<br>AC0910 / AC0920 | 12 |
| | **AC Linear Free Piston Vacuum Pump**<br>VP0125 / VP0140 / VP0435A / VP0450 / VP0625 / VP0660<br>VP0940 / VP0940T | 28 |
| | **DC Linear Free Piston Compressor**<br>DAH102-X1 / DAH102-Y1 / DAH105-X1 / DAH105-Y1<br>DAH110-X1 / DAH110-Y1 | 38 |
| | **DC Linear Free Piston Vacuum Pump**<br>DVH130-X1 / DVH130-Y1 / DVH145-X1 / DVH145-Y1 | 46 |
| Diaphragm | **AC Linear Diaphragm Pump**<br>Dual & Blower Type:<br>VC0100 / VC0101 / VC0201B / VC0301B | 52 |
| DC Motor | **DC Piston Pump**<br>**DC Diaphragm Pump**<br>DP0105-X1 / DP0105-Y1 / DPA0105-X1 / DPA0105-Y1 / DP0410-X1<br>DP0410-Y1 / DP0410-X2 / DP0410-Y2 / DP0410T-Y1 / DP0410T-Y2<br>DP0125 / DP0140 / DP0102 / DP0102S / DP0102H-X1 / DP0102H-X2<br>DP0110-X1 / DP0110-Y1 / DP0110-X3 / DP0110T-X1 / DP0110T-Y1<br>DP0210TA-Y1 | 62 |
| Liquid Pump | **Piezoelectric Pump**<br>BPS / BPH / BPHS/ BPF Type<br>**DC Diaphragm Liquid Pump**<br>DPE-100 / DPE-400 / DPE-400BL / DPE-800 / DPE-100BLC / DPE-200BLC | 86 |
| | **AC Linear Free Piston Blower**<br>LA-28B / LA-45C / LA-60B / LA-80B / LA-100A / LA-120A / LAM-200 | 94 |
| | **Made to Order Model**<br>AC0210 /AC0610A / VP0925A /VP0660 x 2<br>VCK0120 /VC0101E /VC0101S / LAM-150 / Bimor Pump | 100 |
| | **Other product**<br>HK-400A / LV-125A and Vacuum Pen Assenbly | 112 |
| | **"CUPLA" Quick Connect Couplings** | 118 |


## Green Procurement

NITTO KOHKI has made every effort in developing "Environmental Improvement Plans" through the implementation of ISO14001, to execute environmentally conscious business activities on a company-wide basis. As a part of our ongoing commitment to the environment, we are also committed to reduce and/or exclude restricted substances from our products as designated by RoHS directives, laws and regulations of chemical substances.

# Series Selection

## AC Linear Free Piston Compressor

| Model | Rated Pressure | | Max. Pressure | | Rated Pressure & Max. Pressure | Rated Airflow | | Rated Airflow | Page |
|---|---|---|---|---|---|---|---|---|---|
| | kPa | psig | kPa | psig | | L/min | cfm | | |
| AC0102 | 20 | 2.84 | 40 | 5.69 | | 5 | 0.177 | | 13 |
| AC0201A | 10 | 1.42 | 20 | 2.84 | | 20 | 0.71 | | 14 |
| AC0301A | 10 | 1.42 | 30 | 4.27 | | 28 | 0.99 | | 15 |
| AC0401A | 10 | 1.42 | 35 | 4.98 | | 35 | 1.24 | | 16 |
| AC0602 | 15 | 2.13 | 35 | 4.98 | | 40 | 1.41 | | 17 |
| AC0901 | 10 | 1.42 | 40 | 5.69 | | 80 | 2.83 | | 18 |
| AC0902 | 20 | 2.84 | 45 | 6.40 | | 55 | 1.94 | | 19 |
| AC0105 | 50 | 7.11 | 80 | 11.4 | | 2.5 | 0.088 | | 20 |
| AC0110 | 100 | 14.2 | 120 | 17.1 | | 0.8 | 0.028 | | 21 |
| AC0207 | 70 | 9.96 | 100 | 14.2 | | 3.5 | 0.124 | | 22 |
| AC0210 | 100 | 14.2 | 120 | 17.1 | | 3.5 | 0.124 | | 101 |
| AC0410A | 100 | 14.2 | 130 | 18.5 | | 5 | 0.177 | | 23 |
| AC0610/AC0610A | 100 | 14.2 | 150 | 21.3 | | 8 | 0.283 | | 24/102 |
| AC0910 | 100 | 14.2 | 150 | 21.3 | | 16 | 0.57 | | 25 |
| AC0920 | 200 | 28.4 | 350 | 49.7 | | 8 | 0.283 | | 26 |

0 50 100 150 200 250 300 350 (kPa)

0 20 40 60 80 100 120 (L/min)

## AC Linear Free Piston Vacuum Pump

| Model | | Attainable Vacuum | Attainable Vacuum | | Free Air Displacement | | Free Air Displacement | Page |
|---|---|---|---|---|---|---|---|---|
| | | | kPa | in.Hg | L/min | cfm | | |
| VP0125 | | | -33.3 | -9.84 | 7 | 0.247 | | 29 |
| VP0140 | | | -53.3 | -15.7 | 3 | 0.106 | | 30 |
| VP0435A | | | -46.7 | -13.8 | 25 | 0.88 | | 31 |
| VP0450 | | | -66.7 | -19.7 | 18 | 0.64 | | 32 |
| VP0625 | | | -33.3 | -9.84 | 40 | 1.41 | | 33 |
| VP0660 | | | -80 | -23.6 | 25 | 0.88 | | 34 |
| VP0925A | | | -33.3 | -9.84 | 80 | 2.83 | | 103 |
| VP0940 | | | -53.3 | -15.7 | 60 | 2.12 | | 35 |
| VP0940T | | | -53.3 | -15.7 | 120 | 4.24 | | 36 |
| VP0660x2 | Series | | -93.3 | -27.6 | 25 | 0.88 | | 104 |
| | Parallel | | -80 | -23.6 | 50 | 1.77 | | 104 |

(kPa) -100 -80 -60 -40 -20 0

0 20 40 60 80 100 120 (L/min)

## DC Linear Free Piston Compressor

| Model | Rated Pressure | | Max. Pressure | | Rated Pressure & Max. Pressure | Rated Airflow | | Rated Airflow | Page |
|---|---|---|---|---|---|---|---|---|---|
| | kPa | psig | kPa | psig | | L/min | cfm | | |
| DAH102-X1 | 20 | 2.84 | 50 | 7.11 | | 5 | 0.177 | | 39 |
| DAH102-Y1 | 20 | 2.84 | 50 | 7.11 | | 5 | 0.177 | | 40 |
| DAH105-X1 | 50 | 7.11 | 80 | 11.4 | | 2.5 | 0.088 | | 41 |
| DAH105-Y1 | 50 | 7.11 | 80 | 11.4 | | 2.5 | 0.088 | | 42 |
| DAH110-X1 | 100 | 14.2 | 120 | 17.1 | | 1.0 | 0.035 | | 43 |
| DAH110-Y1 | 100 | 14.2 | 120 | 17.1 | | 1.0 | 0.035 | | 44 |

0 50 100 150 200 250 300 (kPa)

0 20 40 60 80 100 120 (L/min)

## DC Linear Free Piston Vacuum Pump

| Model | Attainable Vacuum | Attainable Vacuum | | Free Air Displacement | | Free Air Displacement | Page |
|---|---|---|---|---|---|---|---|
| | | kPa | in.Hg | L/min | cfm | | |
| DVH130-X1 | | -40 | -11.8 | 7 | 0.247 | | 47 |
| DVH130-Y1 | | -40 | -11.8 | 7 | 0.247 | | 48 |
| DVH145-X1 | | -60 | -17.7 | 3 | 0.106 | | 49 |
| DVH145-Y1 | | -60 | -17.7 | 3 | 0.106 | | 50 |

(kPa) -100 -80 -60 -40 -20 0

0 20 40 60 80 100 120 (L/min)

## AC Linear Diaphragm Pump (Blower Type)

| Model | Rated Pressure | | Max. Pressure | | Rated Pressure & Max. Pressure | Rated Airflow | | Rated Airflow | Page |
|---|---|---|---|---|---|---|---|---|---|
| | kPa | psig | kPa | psig | | L/min | cfm | | |
| VC0100 | 4 | 0.57 | 16 | 2.28 | | 6 | 0.212 | | 54 |
| VC0101 | 10 | 1.42 | 20 | 2.84 | | 10 | 0.35 | | 56 |
| VC0101E | 10 | 1.42 | 20 | 2.84 | | 15 | 0.53 | | 107 |
| VC0101S | 5 | 0.71 | 26 | 3.70 | | 15 | 0.53 | | 57 |
| VC0201B | 10 | 1.42 | 18 | 2.56 | | 20 | 0.71 | | 59 |
| VC0301B | 10 | 1.42 | 20 | 2.84 | | 25 | 0.88 | | 61 |

0 50 100 150 200 250 300 (kPa) 0 20 40 60 80 100 120 (L/min)

## AC Linear Diaphragm Pump (Dual Type)

| Model | Attainable Vacuum | Attainable Vacuum | | Rated Pressure | | Max. Pressure | | Rated Pressure & Max. Pressure | Rated Airflow | | Rated Airflow | Page |
|---|---|---|---|---|---|---|---|---|---|---|---|---|
| | | kPa | in.Hg | kPa | psig | kPa | psig | | L/min | cfm | | |
| VC0100 | | -14.7 | -4.33 | 4 | 0.57 | 16 | 2.28 | | 6 | 0.212 | | 53 |
| VC0101 120 V | | -18.7 | -5.51 | 10 | 1.42 | 18 | 2.56 | | 10 | 0.35 | | 55 |
| VC0101 230 V | | -10 | -2.95 | 10 | 1.42 | 15 | 2.13 | | 10 | 0.35 | | 56 |
| VC0101E | | -18.7 | -5.51 | 10 | 1.42 | 20 | 2.84 | | 15 | 0.53 | | 106 |
| VC0101S | | -24 | -7.09 | 5 | 0.71 | 26 | 3.70 | | 15 | 0.53 | | 108 |
| VC0201B | | -18.7 | -5.51 | 10 | 1.42 | 18 | 2.56 | | 20 | 0.71 | | 58 |
| VC0301B | | -21.3 | -6.30 | 10 | 1.42 | 20 | 2.84 | | 25 | 0.88 | | 60 |
| VCK0120 (Vacuum only) | | -26.7 | -7.87 | | | | | | 18* | 0.64* | | 105 |

(kPa) -80 -60 -40 -20 0 0 50 100 150 (kPa) 0 20 40 60 (L/min)

*Free Air Displacement

## DC Liquid Pump

| Model | Working Pressure Range | | Working Pressure Range | Flow Rate | Flow Rate | Self-priming Pressure | | Self-priming Pressure | Page |
|---|---|---|---|---|---|---|---|---|---|
| | kPa | psig | | mL/min | | kPa | psig | | |
| DPE-100 | 0 to 100 | 0 to 14.2 | | 100 | | 20 | 2.84 | | 89 |
| DPE-400 | 0 to 100 | 0 to 14.2 | | 400 | | 40 | 5.69 | | 89 |
| DPE-400BL | 0 to 100 | 0 to 14.2 | | 400 | | 40 | 5.69 | | 89 |
| DPE-800 | 0 to 100 | 0 to 14.2 | | 800 | | 40 | 5.69 | | 89 |
| DPE-100BLC | 0 to 100 | 0 to 14.2 | | 100 | | 10 | 1.42 | | 91 |
| DPE-200BLC | 0 to 100 | 0 to 14.2 | | 200 | | 20 | 2.84 | | 91 |

(kPa) 0 20 40 60 80 100 (mL/min) 0 200 400 600 800 (kPa) 0 20 40 60

*Test conditions: Water at 25 degrees C

## Liquid Pump (BIMOR PUMP)

| Model | Discharge Pressure | | Discharge Pressure | Flow Rate | Flow Rate | Self-priming Pressure | | Self-priming Pressure | Page |
|---|---|---|---|---|---|---|---|---|---|
| | kPa | psig | | mL/min | | kPa | psig | | |
| BPS-215i | 15 | 2.13 | | 30 | | 3 | 0.43 | | 86 |
| BPS-235G | 15 | 2.13 | | 30 | | 1.5 | 0.21 | | |
| BPH-214i | 18 | 2.56 | | 350 | | 8 | 1.14 | | |
| BPH-214D | 18 | 2.56 | | 350 | | 8 | 1.14 | | |
| BPH-214E | 18 | 2.56 | | 350 | | 8 | 1.14 | | |
| BPH-214G | 17 | 2.41 | | 350 | | 7 | 1.00 | | |
| BPH-414i | 35 | 4.98 | | 500 | | 12 | 1.70 | | |
| BPH-414D | 35 | 4.98 | | 500 | | 12 | 1.70 | | |
| BPH-414E | 35 | 4.98 | | 500 | | 12 | 1.70 | | |
| BPH-414G | 32 | 4.54 | | 450 | | 10 | 1.42 | | |
| BPH-474G | 35 | 4.98 | | 400 | | 10 | 1.42 | | |
| BPH-474P | 35 | 4.98 | | 400 | | 10 | 1.42 | | |
| BPHS-414i | 35 | 4.98 | | 700 | | 12 | 1.70 | | |
| BPHS-414E | 35 | 4.98 | | 700 | | 12 | 1.70 | | |
| BPHS-414G | 35 | 4.98 | | 700 | | 12 | 1.70 | | |
| BPHS-474G | 35 | 4.98 | | 500 | | 10 | 1.42 | | |
| BPHS-474P | 35 | 4.98 | | 500 | | 10 | 1.42 | | |
| BPF-465P | 35 | 4.98 | | 400 | | 10 | 1.42 | | |

(kPa) 0 20 40 60 80 100 (mL/min) 0 200 400 600 800 (kPa) 0 20 40 60

*Test conditions: 25°C water at AC frequency 60 Hz.

## DC Linear Compressor and Vacuum Pump (Dual Type)

| Model | Attainable Vacuum | Attainable Vacuum | | Max. Pressure | | Max. Pressure | Free Air Displacement | | Free Air Displacement | Page |
|---|---|---|---|---|---|---|---|---|---|---|
| | | kPa | in.Hg | kPa | psig | | L/min | cfm | | |
| DP0125 | | -33.3 | -9.84 | 30 | 4.27 | | 2.5 | 0.088 | | 73 |
| DP0140 | | -53.3 | -15.7 | 50 | 7.11 | | 4 | 0.141 | | 74 |
| DP0102 | | -26.7 | -7.87 | 45 | 6.40 | | 5 | 0.177 | | 75 |
| DP0102S | | -26.7 | -7.87 | 45 | 6.40 | | 7 | 0.247 | | 76 |
| DP0102H-X1 | | -50.7 | -15.0 | 80 | 11.4 | | 4 | 0.141 | | 77 |
| DP0110-X1 | | -66.7 | -19.7 | 150 | 21.3 | | 7.5 | 0.265 | | 79 |
| DP0110-Y1 | | -66.7 | -19.7 | 150 | 21.3 | | 7.5 | 0.265 | | 80 |
| DP0110-X3 | | -66.7 | -19.7 | 150 | 21.3 | | 7.5 | 0.265 | | 81 |
| DP0110T-X1 | | -60 | -17.7 | 150 | 21.3 | | 5.5 | 0.194 | | 82 |
| DP0110T-Y1 | | -60 | -17.7 | 150 | 21.3 | | 5.5 | 0.194 | | 83 |
| DP0210TA-Y1 | | -60 | -17.7 | 150 | 21.3 | | 10 | 0.35 | | 84 |
| DP0105-X1 | | -66.7 | -19.7 | 250 | 35.6 | | 2.8 | 0.099 | | 63 |
| DP0105-Y1 | | -66.7 | -19.7 | 250 | 35.6 | | 2.8 | 0.099 | | 64 |

(kPa) -80 -60 -40 -20 0 | 0 50 100 150 200 250 (kPa) | 0 20 40 60 (L/min)

## DC Linear Compressor only

| Model | Attainable Vacuum | Attainable Vacuum | | Max. Pressure | | Max. Pressure | Free Air Displacement | | Free Air Displacement | Page |
|---|---|---|---|---|---|---|---|---|---|---|
| | | kPa | in.Hg | kPa | psig | | L/min | cfm | | |
| DP0102H-X2 | | | | 80 | 11.4 | | 4 | 0.141 | | 78 |
| DPA0105-X1 | | | | 220 | 31.3 | | 2.8 | 0.099 | | 65 |
| DPA0105-Y1 | | | | 220 | 31.3 | | 2.8 | 0.099 | | 66 |
| DP0410-X2 | | | | 180 | 25.6 | | 18 | 0.64 | | 69 |
| DP0410-Y2 | | | | 180 | 25.6 | | 18 | 0.64 | | 70 |
| DP0410T-Y2 | | | | 150 | 21.3 | | 34 | 1.2 | | 72 |

(kPa) -80 -60 -40 -20 0 | 0 50 100 150 200 250 (kPa) | 0 20 40 60 (L/min)

## DC Vacuum Pump only

| Model | Attainable Vacuum | Attainable Vacuum | | Max. Pressure | | Max. Pressure | Free Air Displacement | | Free Air Displacement | Page |
|---|---|---|---|---|---|---|---|---|---|---|
| | | kPa | in.Hg | kPa | psig | | L/min | cfm | | |
| DP0410-X1 | | -77.3 | -22.8 | | | | 18 | 0.64 | | 67 |
| DP0410-Y1 | | -77.3 | -22.8 | | | | 18 | 0.64 | | 68 |
| DP0410T-Y1 | | -77.3 | -22.8 | | | | 34 | 1.2 | | 71 |

(kPa) -80 -60 -40 -20 0 | 0 50 100 150 200 250 (kPa) | 0 20 40 60 (L/min)

# Conversion Tables

Pressure / Flow Rate / Vacuum

## Pressure

| kPa | kgf/cm$^2$ (bar) | psig |
|---|---|---|
| 300 | 3.0 | 42.7 |
| 280 | 2.8 | 39.8 |
| 250 | 2.5 | 35.6 |
| 200 | 2.0 | 28.5 |
| 180 | 1.8 | 25.6 |
| 150 | 1.5 | 21.3 |
| 120 | 1.2 | 17.1 |
| **100** | **1.0** | **14.2** |
| 80 | 0.8 | 11.4 |
| 70 | 0.7 | 9.96 |
| 50 | 0.5 | 7.11 |
| 45 | 0.45 | 6.40 |
| 40 | 0.4 | 5.69 |
| 35 | 0.35 | 4.98 |
| 34 | 0.34 | 4.84 |
| 30 | 0.3 | 4.27 |
| 20 | 0.2 | 2.84 |
| 18 | 0.18 | 2.56 |
| 15 | 0.15 | 2.13 |
| 11 | 0.11 | 1.56 |
| 10 | 0.1 | 1.42 |
| **7** | **0.07** | **1.00** |
| 5 | 0.05 | 0.71 |
| 1 | 0.01 | 0.142 |
| * 0 | 0 | 0 |

## Flow Rate

| cfm | L/min | cfm | L/min |
|---|---|---|---|
| **0.035** | **1.00** | 2.12 | 60.0 |
| 0.070 | 2.00 | 2.25 | 63.7 |
| 0.100 | 2.83 | 2.47 | 70.0 |
| 0.105 | 3.00 | 2.50 | 70.8 |
| 0.177 | 5.00 | 2.65 | 75.0 |
| 0.250 | 7.08 | 2.75 | 77.9 |
| 0.353 | 10.0 | 2.83 | 80.0 |
| 0.500 | 14.2 | 3.00 | 85.0 |
| 0.530 | 15.0 | 3.18 | 90.0 |
| 0.708 | 20.0 | 3.25 | 92.0 |
| 0.750 | 21.2 | 3.50 | 99.1 |
| 0.883 | 25.0 | 3.53 | 100 |
| **1.00** | **28.32** | 3.75 | 106 |
| 1.06 | 30.0 | 3.89 | 110 |
| 1.24 | 35.0 | 4.00 | 113 |
| 1.25 | 35.4 | 4.24 | 120 |
| 1.41 | 40.0 | 4.50 | 127 |
| 1.50 | 42.5 | 5.00 | 142 |
| 1.59 | 45.0 | 5.30 | 150 |
| 1.75 | 49.6 | 6.00 | 170 |
| 1.77 | 50.0 | 7.00 | 198 |
| 2.00 | 56.6 | 7.06 | 200 |

## Vacuum

| kPa | mmHg | mbar | in.Hg |
|---|---|---|---|
| * 0 | 0 | 0 | 0 |
| −13.3 | −100 | −133 | −3.94 |
| −26.7 | −200 | −267 | −7.87 |
| −33.3 | −250 | −333 | −9.84 |
| −44.0 | −330 | −440 | −13.0 |
| −45.3 | −340 | −453 | −13.4 |
| −46.7 | −350 | −467 | −13.8 |
| −53.3 | −400 | −533 | −15.7 |
| −60.0 | −450 | −600 | −17.7 |
| −66.7 | −500 | −667 | −19.7 |
| −73.3 | −550 | −733 | −21.7 |
| −80.0 | −600 | −800 | −23.6 |
| −93.3 | −700 | −933 | −27.6 |
| −100 | −750 | −1000 | −29.5 |
| ** −101.3 | −760 | −1013 | −29.9 |

* Gauge pressure
** Absolute vacuum

## Pressure

| from \ to | kPa | kgf/cm$^2$ | bar | psig |
|---|---|---|---|---|
| **kPa** | 1 | 0.01 | 0.01 | 0.142 |
| **kgf/cm$^2$** | 100 | 1 | 1 | 14.2 |
| **bar** | 100 | 1 | 1 | 14.2 |
| **psig** | 7 | 0.07 | 0.07 | 1 |

## Vacuum

| from \ to | kPa | mmHg | in.Hg | mbar |
|---|---|---|---|---|
| **kPa** | −1 | −7.50 | −0.295 | −10 |
| **mmHg** | −0.133 | −1 | −0.0394 | −1.335 |
| **in. Hg** | −3.39 | −25.4 | −1 | −33.92 |
| **mbar** | −0.1 | −0.75 | −0.0295 | −1 |

# The mechanism and structure of Nitto Kohki pumps

## Linear Motor Driven Free Piston System

The attractive force of the electromagnet and the reaction force of the spring drive the piston to generate pressure.
There are AC models that use AC waveform and a silicon diode, and DC models that use DC waveform and an inverter.

**[AC Power (The effect of using a silicon diode)]** AC power

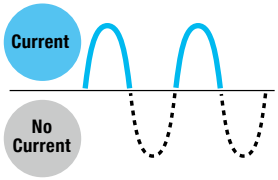


By utilizing the characteristics of the silicon diode, it creates a half-rectified current that repeats ON (current flows) and OFF (no current).

**[DC Power (The effect of using an inverter)]** DC power

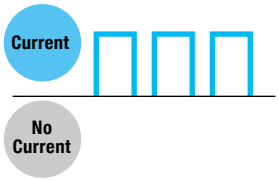


The inverter creates a half-rectified current that repeats ON (current flows) and OFF (no current).

**<Structural image>**

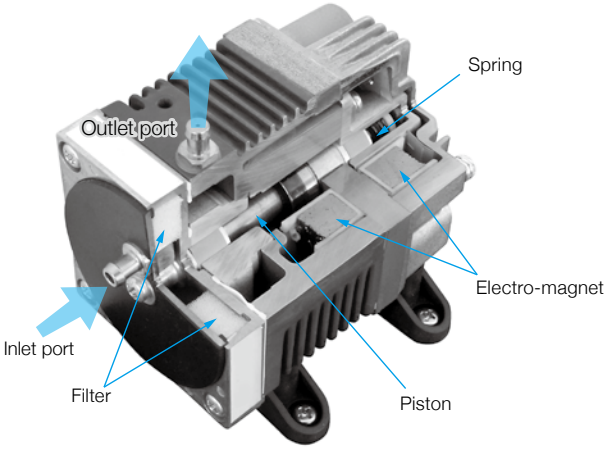


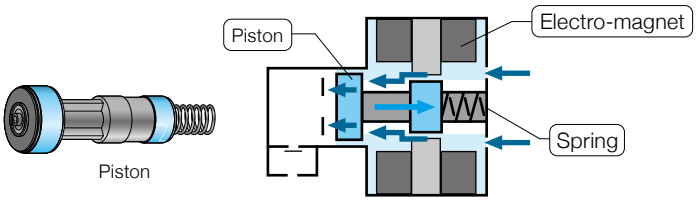


When electric current flows, a magnetic force is generated to pull the piston and the spring is compressed.

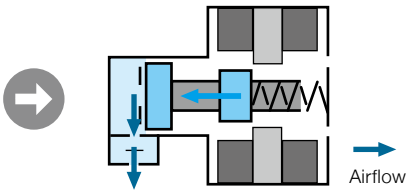


When the electric current stops, the magnetic force is lost and the piston is pushed back by the restoring force of the compressed spring.

## Electromagnetic Driven Diaphragm System

The attractive / repulsive force of the electromagnet reciprocates a vibrator that moves the diaphragm to generate pressure.

**[AC Power (The effect of using a diaphragm)]**

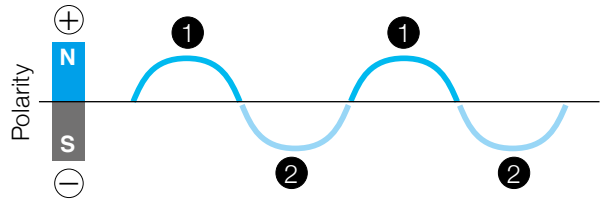


**<Structural image>**

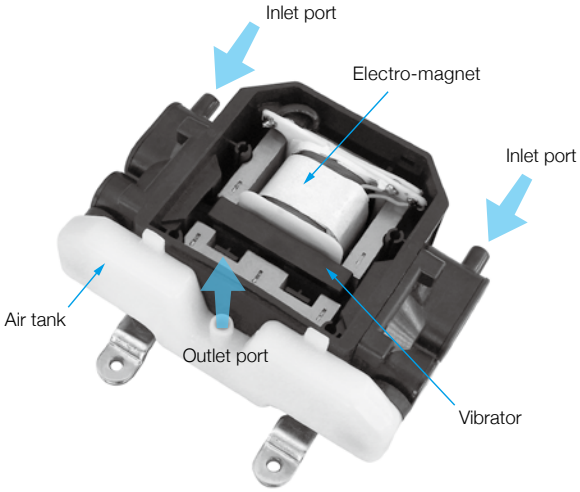


The air is drawn and discharged alternately by the changing polarity of the AC power supply

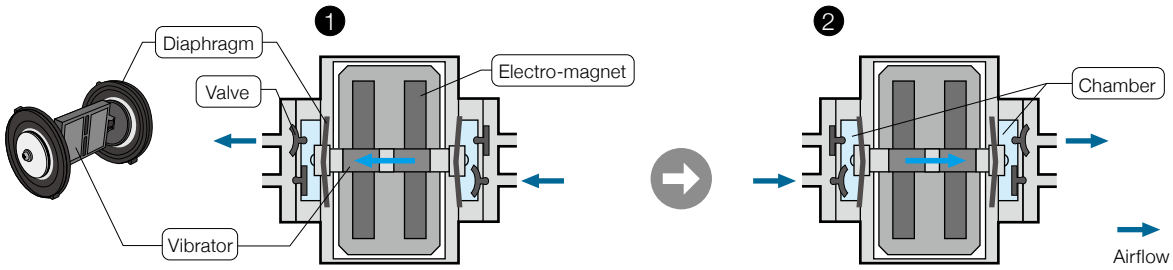

## DC Motor Driven Diaphragm System

The rotational motion of the DC motor is converted into a reciprocating motion by the crank, and moves the diaphragm attached to the connecting rod to generate pressure.

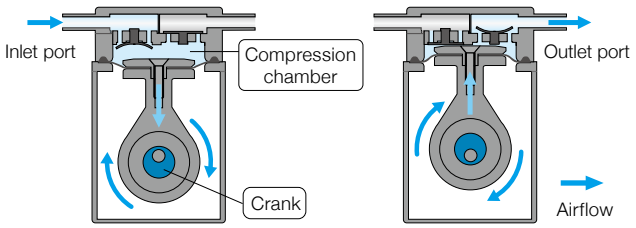


### <Parts>

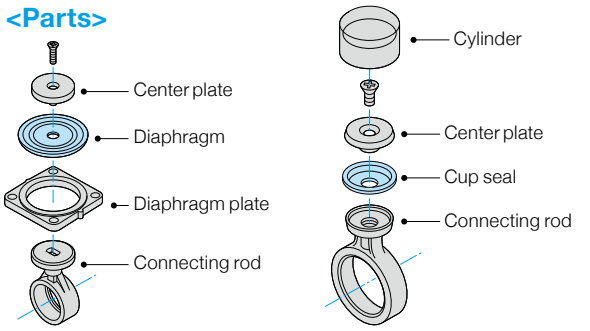


Diaphragm pump

Piston pump (Cup seal system)

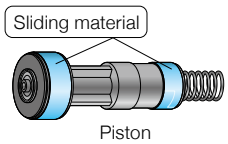


The know-how of the piston sliding material used for Nitto Kohki linear compressor and vacuum pump is utilized for the cup seal.

## DC Motor Driven Piston Pump (Cup seal system)

The rotational motion of the DC motor is converted into a reciprocating motion by the crank, and moves the cup seal attached to the connecting rod to generate pressure.

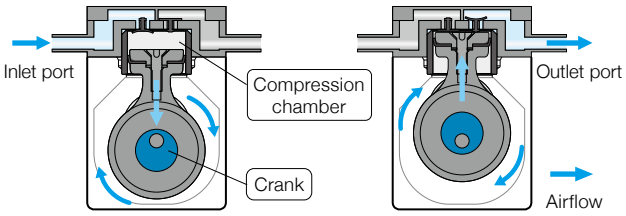


The outer circumference of the seal part (cup seal) flexibly follows the inner wall of the cylinder against the dynamic movement of the piston.

### <Structural image> (Common to diaphragm and cup seal)

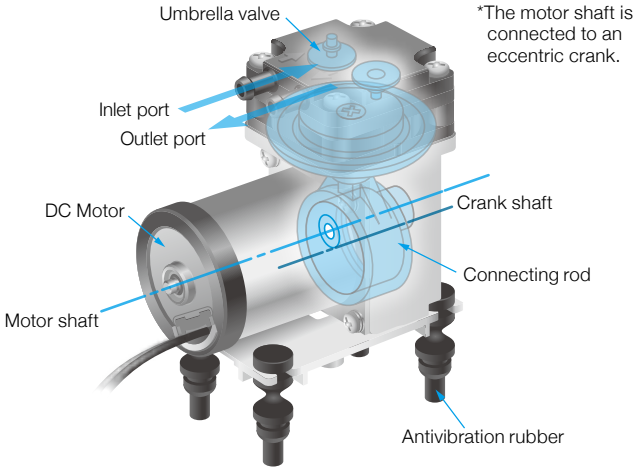


## Liquid pump / Diaphragm System

### <Pulse absorption mechanism>

1. Suction
2. Discharge. Partial fluid delivery to pulse absorption chamber, not directly forced to outlet port.
3. Cyclical suction drawn into pump is synchronized with the discharge. Pulses are attenuated through the process of 2 and 3 .

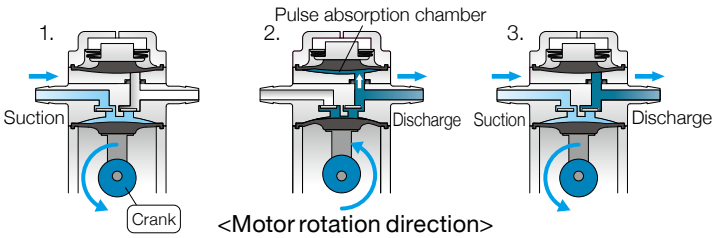


<Motor rotation direction>

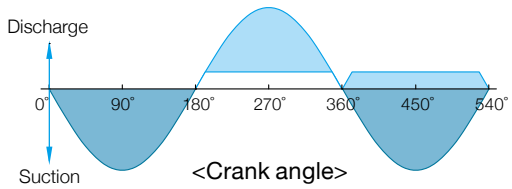


<Crank angle>

## Liquid pump / Piezoelectric pump

### <Piezoelectric element>

**•Bimorph vibrator**

BIMOR PUMP's driving force, the bimorph, comprises the elastic mold (Shim) between two parallel piezoelectric wafers.

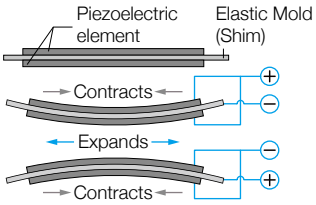


*The shape of Bimorph is circular.
It deforms when applied with electricity.

### <Cross section>

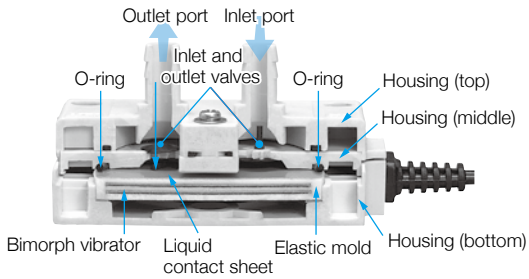


# Information found in the model name

The following indications of power consumption, rated pressure and attained vacuum should be used only as a general guideline for model selection.

**AC0102**

- 02: Rated Pressure: 20 kPa {0.2 kgf/cm²}
- 01: Rated Consumption: 10 W
- AC: Air compressor

**VP0125**

- 25: Attainable Vacuum: -33.3 kPa {-250 mmHg}
- 01: Rated Consumption: 10 W
- VP: Vacuum pump

# Explanation of Technical Terms

**Be sure to read the following "Explanation of Technical Terms" before selecting a model appropriate for your application.**

## Application Examples and Applicable Fluids for Compressors and Vacuum Pumps

**Application:** for incorporation into equipment **Applicable fluid:** Air

## For Compressors & Vacuum Pumps

**Rated performance:**
The average total accumulated time over which the unit can be used without repair, except the maintenance of the filter. This indicates the expected time required for the rated air flow to fall to 80% of the specification value in the rated operation. The actual life might vary depending on the actual operating and environmental conditions such as output pressure setting, maintenance schedule, ventilation, ambient temperature, duty cycle, etc.

**MTTF:**
MTTF (Mean Time to Failure) is the average time that the product will function before it fails.However, this time is reference only and does not guarantee.Since MTTF depends on your actual operating environment and conditions, conduct performance evaluation test with an actual product prior to use.

**Rated voltage:**
The two major types are 115 V AC/60 Hz and 230 V AC/50 Hz (excluding DC motors). While most models can be operated at both 50 Hz and 60 Hz with different performance characteristics, there are some models that are frequency specific.

**Duty cycle:**
The period of operation under the condition that the coil temperature will not exceed the coil insulation class limit.

**Rated frequency:**
In the case of AC drive pumps, the rated frequency will vary according to the model. While some are designed for only 50 Hz or for 60 Hz, some are designed for both 50 Hz and 60 Hz.

**Coil insulations:**
The suggested class, most bare units attaining "E" class, is based on Japanese electric regulations. They are merely suggestions since bare units are considered "components" and are not classified as complete products or systems.

| Coil Insulation Class(for reference only) | (Temperature limit, degrees C) |
|---|---|
| A | 100 |
| E | 115 |
| B | 125 |
| F | 150 |

**Control method:**
Be careful when controlling compressors and vacuum pumps with electronic components because the power factor depends upon the load.

**Outside & mounting dimensions:**
Useful for assessing the required space for installation. Include sufficient space surrounding the pump when designing it into your application.

**Operating ambient temperature:** 0 to 40°C

**Operating ambient humidity:** 30 to 85% non-condensing

**Storage environment temperature:** -10 to 60°C

**Storage environment humidity:** 10 to 90% non-condensing

### Improvement Suggestion

Our compressors and vacuum pumps employ a unique internal coil cooling feature to reduce or control the rise in internal temperature. If they are operated at higher than rated pressures, elevated temperatures may result. Should these temperatures become excessive, operating duty cycles may need to be reduced, or the use of an auxiliary cooling fan should be considered.

## For Compressors

| | |
|---|---|
| **Rated pressure:** | This is the pressure point where you will get optimum capabilities for performance and service life and where the pump is designed to have almost the same airflow regardless of a rated frequency of 50 Hz or 60 Hz. |
| **Rated airflow:** | The discharge airflow volume at the rated pressure. |
| **Rated operation:** | Operating conditions regarding the rated pressure, rated voltage, and rated frequency. |
| **Maximum pressure:** | The highest obtainable pressure at which the pump is designed to operate while producing zero discharge airflow (not guaranteed; for reference only). |
| **Power consumption:** | The wattage during operation at the rated pressure. |
| **Electric current:** | The electric current during operation at the rated pressure (for reference only). |
| **Airflow characteristics:** | Discharge pressure-airflow curve (for reference only). |
| **Power consumption characteristics:** | Discharge pressure-power consumption curve (for reference only). |

## For Vacuum Pumps

| | |
|---|---|
| **Attainable vacuum :** | The highest vacuum the pump can attain with the pump inlet closed (except some of the exclusive models).<br>*The degree of vacuum shown in this catalog is gauge pressure. |
| **Free air displacement:** | The airflow volume at zero vacuum (within three (3) minutes after starting). |
| **Power consumption:** | The maximum wattage on the power consumption curve when measured against vacuum levels up to the pumps attainable vacuum. |
| **Electric current:** | The maximum electric current on the current characteristics curve when measured against vacuum levels up to the pumps attainable vacuum. (for reference only). |
| **Airflow characteristics:** | Vacuum-airflow curve (for reference only). |
| **Power consumption characteristics:** | Vacuum-power consumption curve (for reference only). |
| **Exhaust characteristics:** | The time required to attain the respective vacuum in a 10 liter container (for reference only). |

## For DC Pumps

| | |
|---|---|
| **Operating ambient temperature:** | 0 to 40°C (5 to 50°C for DP0105 only) |
| **Operating ambient humidity:** | 30 to 85% non-condensing |

Start-up the pump at the same level as the atmospheric pressure (Similarly in the case of DPE series pumps)

## For Liquid Pumps

| | |
|---|---|
| **Self-priming pressure:** | The power the pump requires to draw up 25°C water. 1 kPa is equal to the power needed to draw up 25°C water 10 cm. |

This catalog will give the guidelines needed to determine the appropriate model for your application(s). However, in certain cases you may need further detailed information, which will be provided in the form of a specifications sheet for each model/version by our technical staff who will further assist you in your selection.

**Specifications and designs are subject to change at any time without notice.**
**It is recommended that OEM customers confirm the required specifications in writing before placing orders.**

**Experience gained in designing, engineering, manufacturing and continually perfecting our products in thousands of applications has resulted in a "functionally intelligent" package. Please review these key design features and see how every design element contributes overall to the creation of a superior compressor or vacuum pump.**

## The Key Design Features of the Linear-motor-driven Free Piston System

### Compact and Lightweight
**With the motor and compressor combined into the single structure**

With the piston as the only moving part, efficient space utilization enables our pump to be considerably smaller and lighter than other pumps. This allows the OEM design engineer increased packaging options for other internal components.

### Low Vibration
**Using an ultra-lightweight piston**

Reducing the moving parts to only the piston minimizes reactive force vibrations to the pump body. In addition, the secondary vibrations are isolated or absorbed through the anti-vibration rubber feet.

### Low Noise Level
**No transmission assemblies, means less noise**

With no need for complicated transmission mechanisms riding on ball bearings, or actuating linkages creating friction and noise, NITTO KOHKI's pumps are inherently quieter. Additionally, the almost completely sealed configuration further suppresses secondary internal operating noises.

### Clean Operation – Clean Air
**Due to oil-less construction**

All wearing surfaces use no oil, grease or other contaminating lubricants. The combination of a precision fluoropolymer sleeved piston assisted by an "air-bearing effect" made possible through a unique air path design, assures that the outlet air is completely free of oil.

### Low Power Consumption
**Truly energy efficient through integrated design**

Since the low mass piston is the only moving part, frictional losses are minimized, allowing lower starting and running current, and thus greater efficiency. Related benefits are realized through a lower rise in temperature, facilitating a longer operating life for the pump and the other components within your system.

### Overload Protection Structure
**Protects against burnout**

As the pressure within the compressor increases, the piston stroke decreases. Along with this, electric current decreases. Thus a temporary overload will not cause a failure or the pump to burnout.

### Minimal Pulsating Effect
**Due to the ideal piston stroke**

The piston's mechanical resonance speed is synchronized with the input power frequency regardless of the load, i.e., 3000 strokes at 50 Hz, and 3600 strokes at 60 Hz per minute. This high speed produces shorter pulses which translate into a smoother, more uniform and "linear" motion.

### Instant Response
**Enabling easy start-ups in frequent on-off short cycle applications**

A very low starting current enables our pumps to produce immediate performance in quick short cycle applications, even in the presence of residual back pressure.

### Easy Maintenance
**Only air filter and piston to change**

The oil-less construction requires no lubrication. A simple mechanism containing the piston as the only moving part causes no failure or burning due to an overload and provides stable performance over a long period of time.

### Longer Lifetime
**Increased OEM value**

All key design features listed here combine to provide superior performance in all the important aspects of superior pump design. This enables the OEM engineer to have complete confidence in incorporating the unit into the most demanding systems, in the most advanced equipment.

AC LINEAR
Free Piston Compressor

# AIR COMPRESSOR

**AC series** Low pressure

**AC series** Intermediate pressure

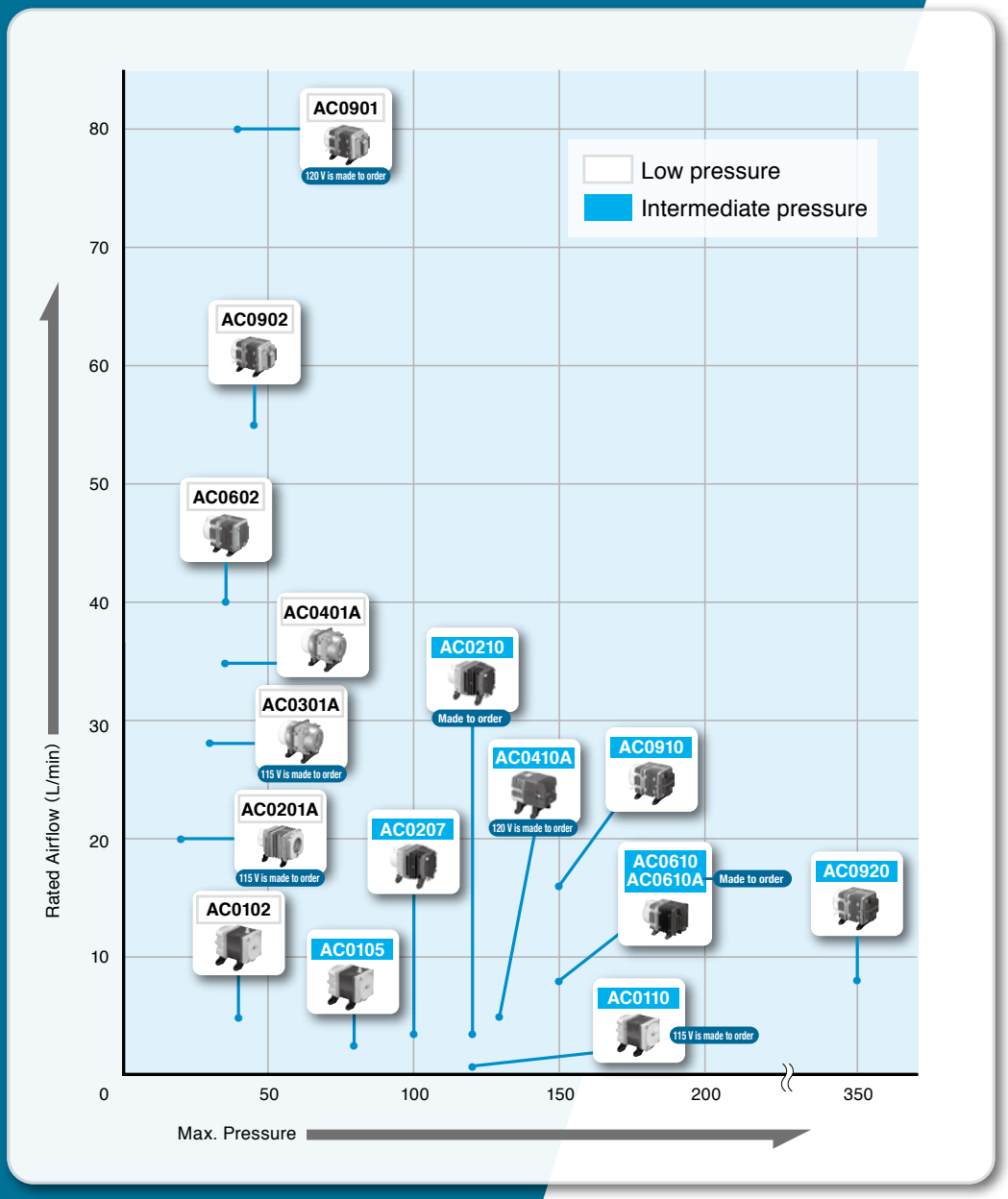


Page


AC0102 — 13
AC0201A — 14
AC0301A — 15
AC0401A — 16
AC0602 — 17
AC0901 — 18
AC0902 — 19

AC0105 — 20
AC0110 — 21
AC0207 — 22
AC0410A — 23
AC0610 — 24
AC0910 — 25
AC0920 — 26


**Made to Order**


AC0210 — 101
AC0610A — 102

# Compressor

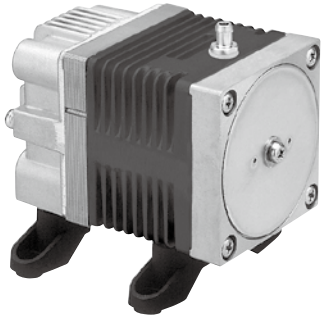

## Model AC0102

115 V/230 V | 230 V | 230 V

### Airflow & Power Consumption

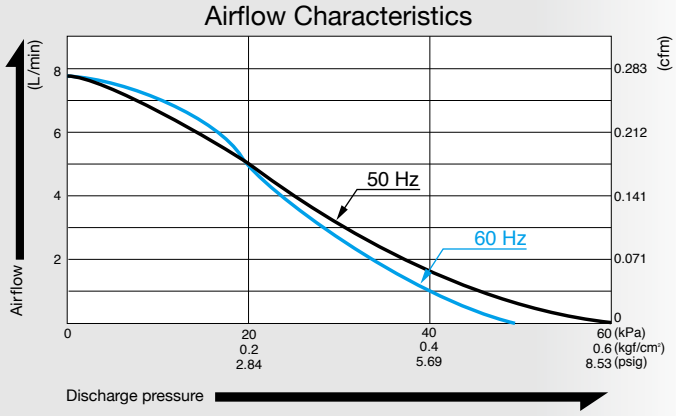


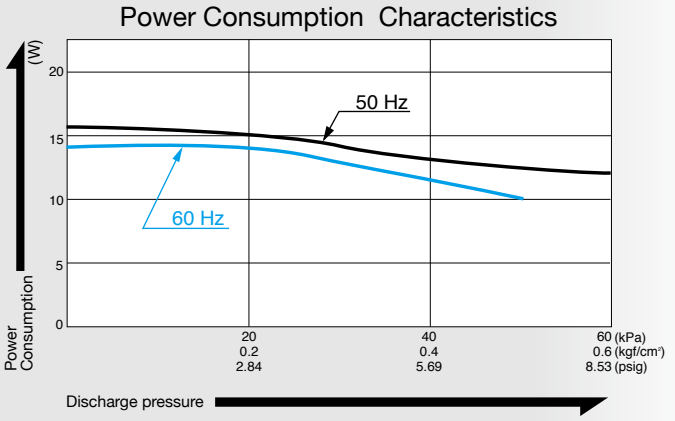


### Specifications

| | | |
|---|---|---|
| Rated Pressure | 20 kPa (0.2 kgf/cm²)<br>0.2 bar<br>2.84 psig | |
| Rated Airflow | 5 L/min<br>0.177 cfm | |
| Maximum Pressure | 40 kPa (0.4 kgf/cm²)<br>0.4 bar<br>5.69 psig | |
| Rated Voltage | 115 V AC | 230 V AC |
| Power Consumption | 14 W | 15 W |
| Rated Frequency | 60 Hz | 50 Hz |
| Rated Performance (MTTF) | 10,000 hours | |
| Outlet | 6 mm O.D. hose barb | |
| Duty Cycle | Continuous | |
| Coil Insulation Class | Class B for UL | |
| Mounting Dimensions | 48 (L) x 62 (W) mm<br>1 - 57/64" (L) x 2 - 7/16" (W) | |
| Weight | 0.7 kg<br>1.54 Lbs | |
| Leadwire Length | 200 mm<br>7 - 7/8" | |

### Application Examples

**Dripping Machine**

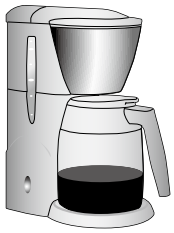

**Blood Pressure Tester**

### External Dimensions (Unit: mm)

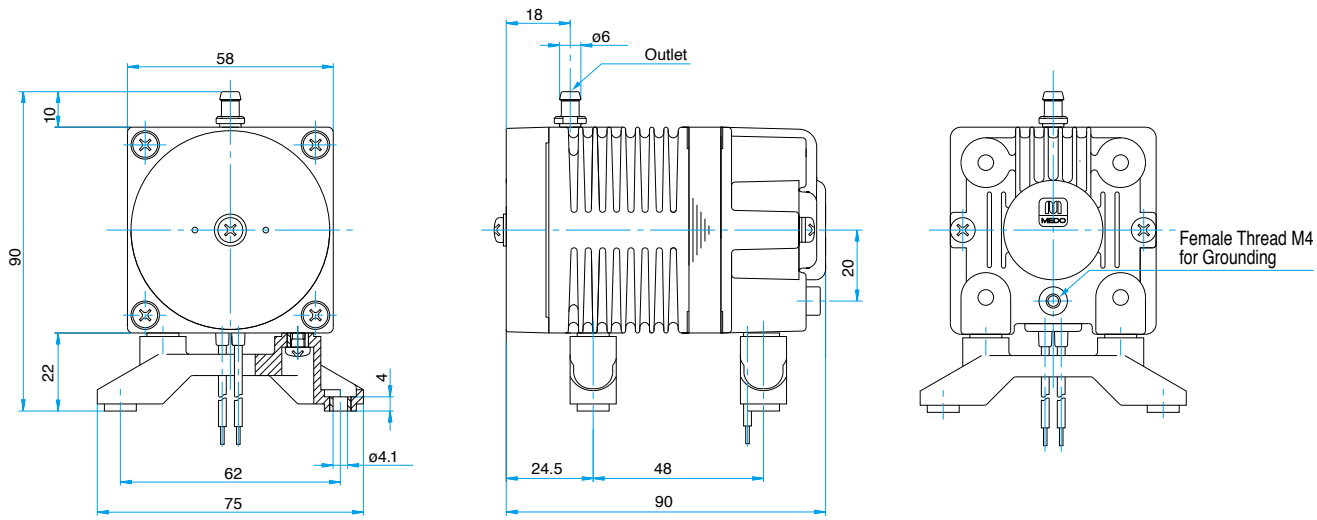

# Compressor

## Model AC0201A

115 V is made to order

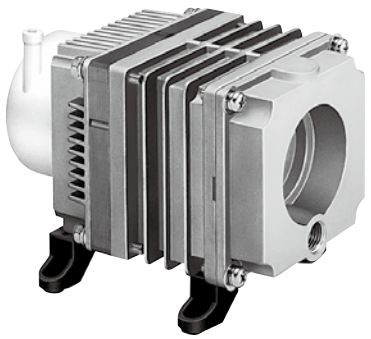

115 V | 230 V | 230 V

### Airflow & Power Consumption

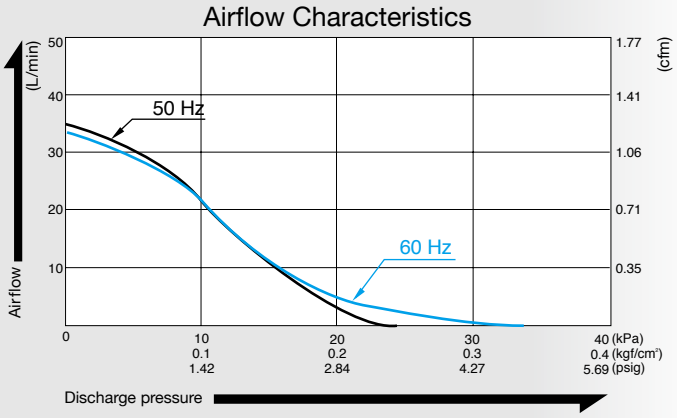


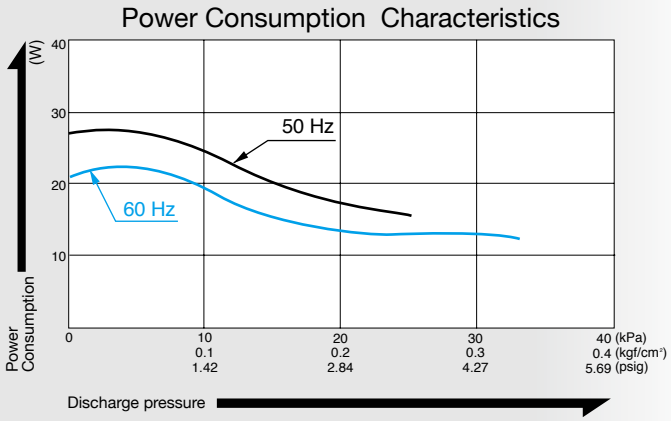


### Specifications

| | | |
|---|---|---|
| Rated Pressure | 10 kPa (0.1 kgf/cm²)<br>0.1 bar<br>1.42 psig | |
| Rated Airflow | 20 L/min<br>0.71 cfm | |
| Maximum Pressure | 20 kPa (0.2 kgf/cm²)<br>0.2 bar<br>2.84 psig | |
| Rated Voltage | 115 V AC | 230 V AC |
| Power Consumption | 19 W | 23 W |
| Rated Frequency | 60 Hz | 50 Hz |
| Rated Performance | 6,000 hours | |
| Outlet | ISO Rc 1/4 | |
| Duty Cycle | Continuous | |
| Coil Insulation Class | Class B for UL | Class E equivalent |
| Mounting Dimensions | 73 (L) x 88 (W) mm<br>2 - 7/8" (L) x 3 - 15/32" (W) | |
| Weight | 1.5 kg<br>3.3 Lbs | |
| Leadwire Length | 200 mm<br>7 - 7/8" | |

### Application Examples

Seat Lifter

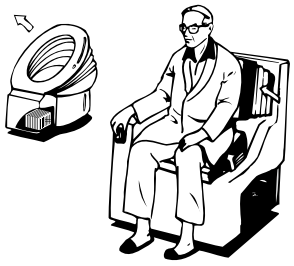

Bed Sore Prevention Mattress

### External Dimensions (Unit: mm)

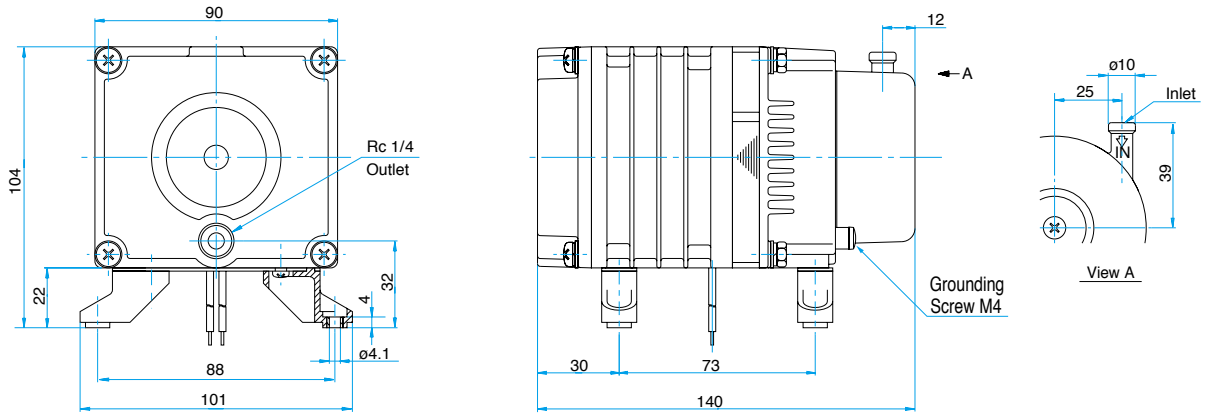

# Compressor

## Model AC0301A

115 V is made to order

115 V | 230 V | 230 V

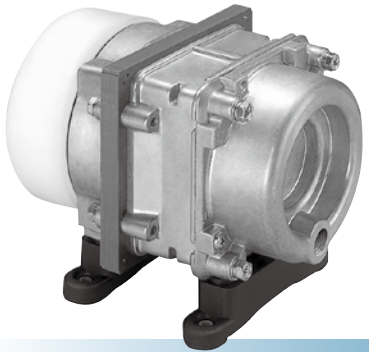

### Airflow & Power Consumption

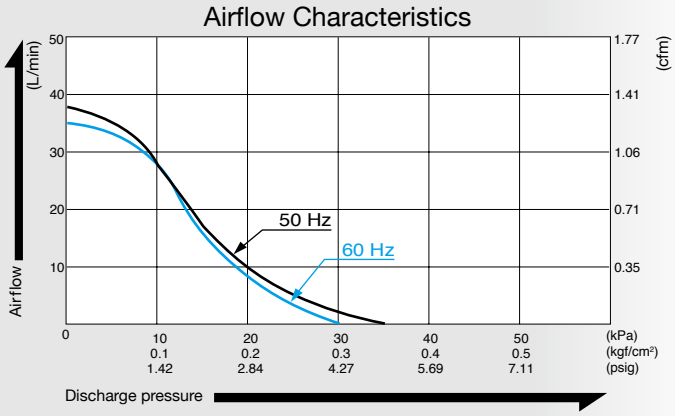


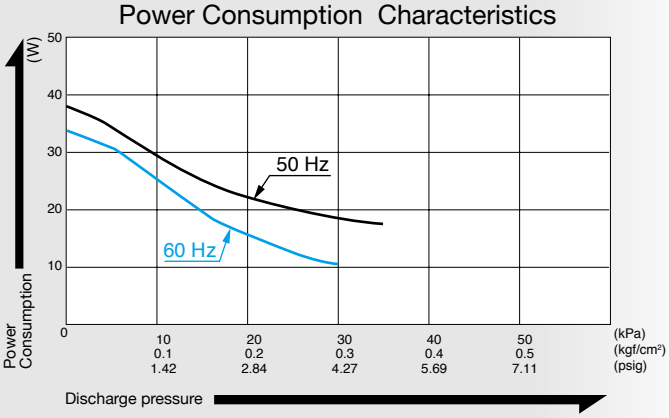


### Specifications

| | | |
|---|---|---|
| Rated Pressure | 10 kPa (0.1 kgf/cm²)<br>0.1 bar<br>1.42 psig | |
| Rated Airflow | 28 L/min<br>0.99 cfm | |
| Maximum Pressure | 30 kPa (0.3 kgf/cm²)<br>0.3 bar<br>4.27 psig | |
| Rated Voltage | 115 V AC | 230 V AC |
| Power Consumption | 25 W | 29 W |
| Rated Frequency | 60 Hz | 50 Hz |
| Rated Performance | 10,000 hours | |
| Outlet | ISO Rc 1/4 | |
| Duty Cycle | Continuous | |
| Coil Insulation Class | Class B for UL | Class E equivalent |
| Mounting Dimensions | 68 (L) x 84 (W) mm<br>2 - 43/64" (L) x 3 - 5/16" (W) | |
| Weight | 1.9 kg<br>4.2 Lbs | |
| Leadwire Length | 200 mm<br>7 - 7/8" | |

### Application Examples

Liquid Mixer

Seat Lifter

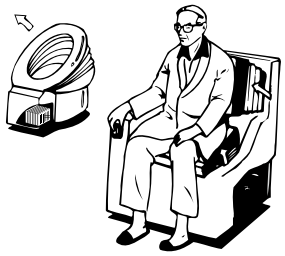

### External Dimensions (Unit: mm)

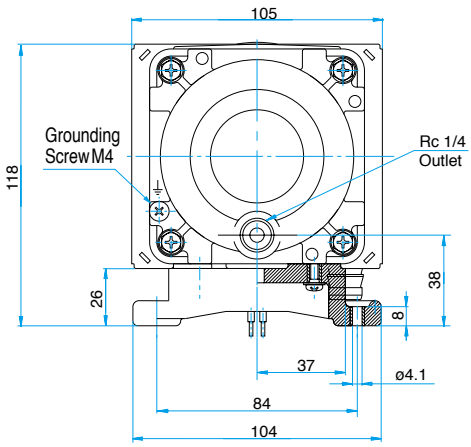


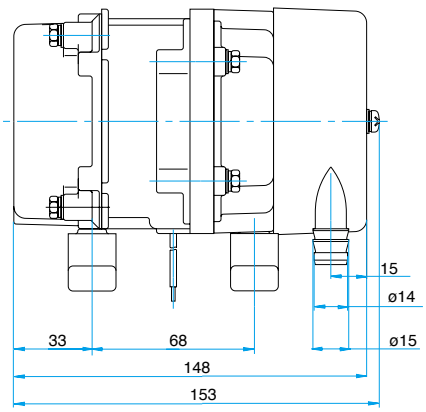

# Compressor

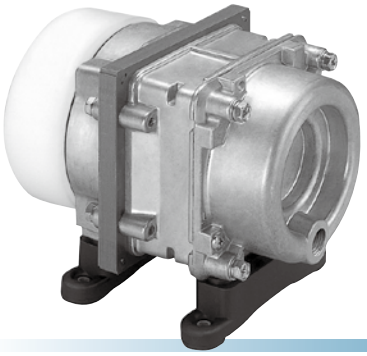

## Model AC0401A

120 V | 230 V | 230 V

### Airflow & Power Consumption

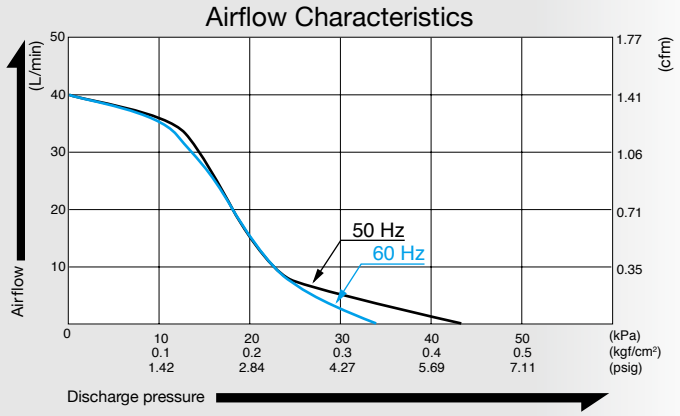


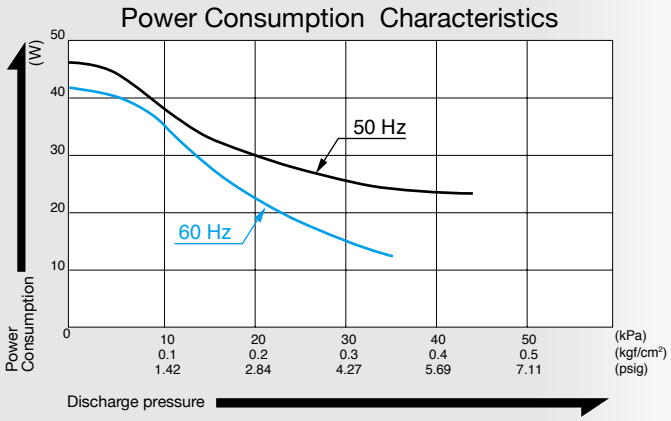


### Specifications

| | | |
|---|---|---|
| Rated Pressure | 10 kPa (0.1 kgf/cm²)<br>0.1 bar<br>1.42 psig | |
| Rated Airflow | 35 L/min<br>1.24 cfm | |
| Maximum Pressure | 35 kPa (0.35 kgf/cm²)<br>0.35 bar<br>4.98 psig | |
| Rated Voltage | 120 V AC | 230 V AC |
| Power Consumption | 35 W | 38 W |
| Rated Frequency | 60 Hz | 50 Hz |
| Rated Performance | 10,000 hours | |
| Outlet | ISO Rc 1/4 | |
| Duty Cycle | Continuous | |
| Coil Insulation Class | Class A for UL | Class E equivalent |
| Mounting Dimensions | 68 (L) x 84 (W) mm<br>2 - 43/64" (L) x 3 - 5/16" (W) | |
| Weight | 1.9 kg<br>4.2 Lbs | |
| Leadwire Length | 200 mm<br>7 - 7/8" | |

### Application Examples

**Liquid Mixer**

**Air Bearing**

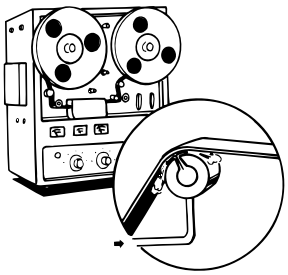

### External Dimensions (Unit: mm)

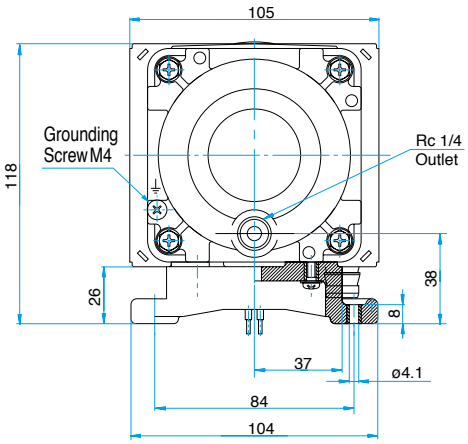


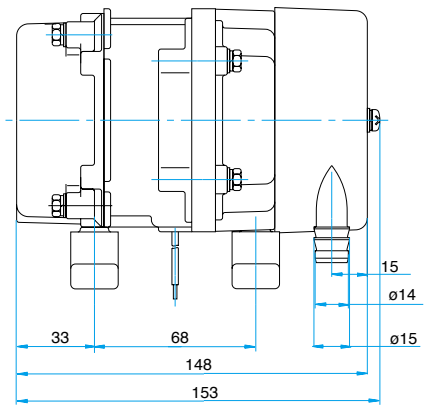

# Compressor

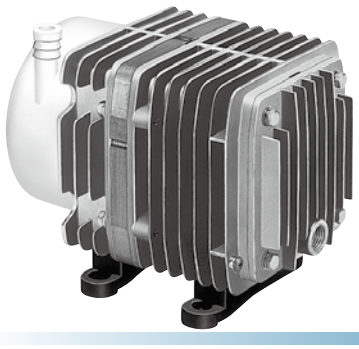

## Model AC0602

115 V | 230 V | 230 V

### Airflow & Power Consumption

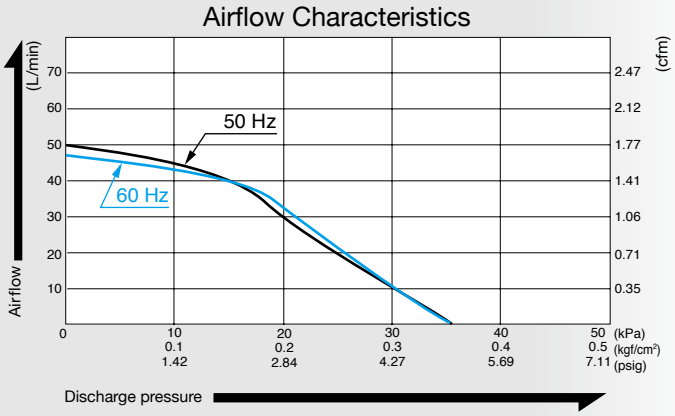


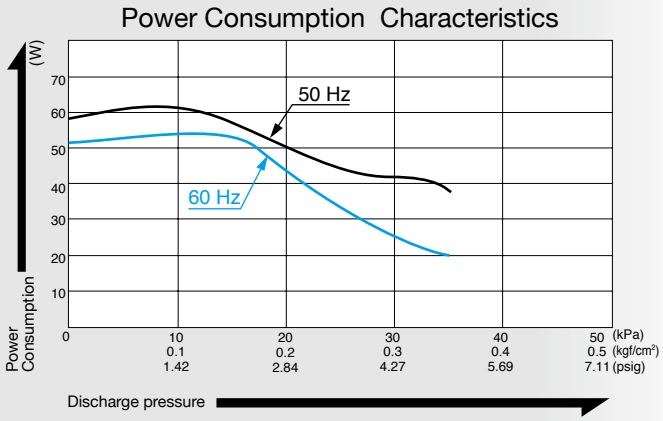


### Specifications

| | | |
|---|---|---|
| Rated Pressure | 15 kPa (0.15 kgf/cm²)<br>0.15 bar<br>2.13 psig | |
| Rated Airflow | 40 L/min<br>1.41 cfm | |
| Maximum Pressure | 35 kPa (0.35 kgf/cm²)<br>0.35 bar<br>4.98 psig | |
| Rated Voltage | 115 V AC | 230 V AC |
| Power Consumption | 52 W | 58 W |
| Rated Frequency | 60 Hz | 50 Hz |
| Rated Performance | 10,000 hours | |
| Outlet | ISO Rc 1/4 | |
| Duty Cycle | Continuous | |
| Coil Insulation Class | Class A for UL | Class E equivalent |
| Mounting Dimensions | 68 (L) x 84 (W) mm<br>2 - 43/64" (L) x 3 - 5/16" (W) | |
| Weight | 3 kg<br>6.6 Lbs | |
| Leadwire Length | 235 mm<br>9 - 1/4" | 350 mm<br>13 - 25/32" |

### Application Examples

**Air Blaster for Bandsaw**

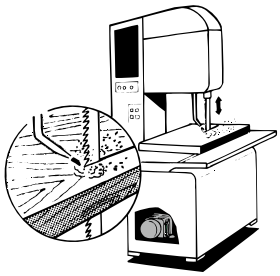

**Clean Room Ventilation**

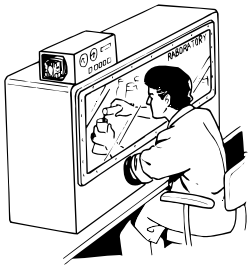

### External Dimensions (Unit: mm)

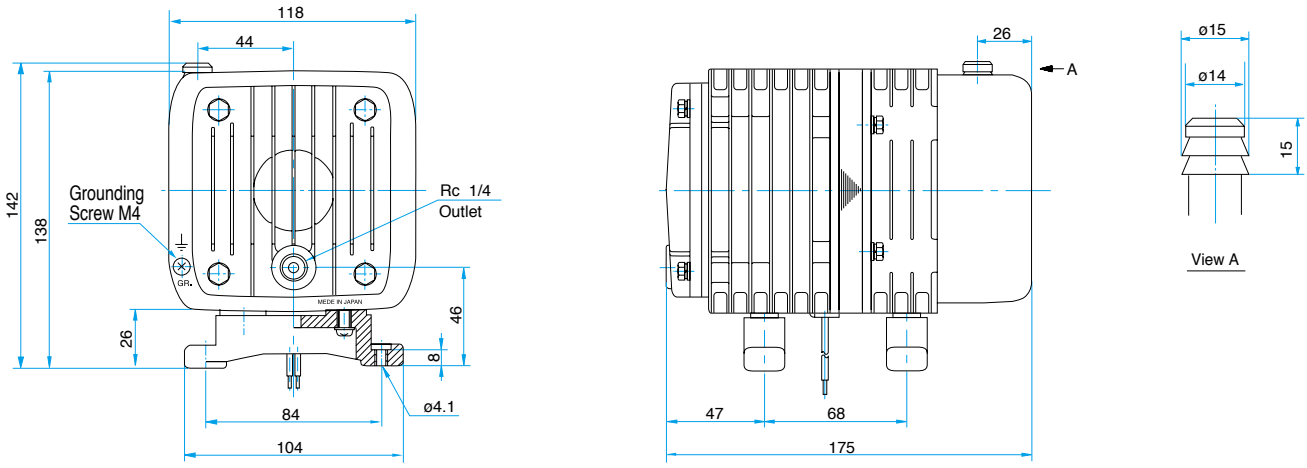

# Compressor

## Model AC0901

120 V is made to order

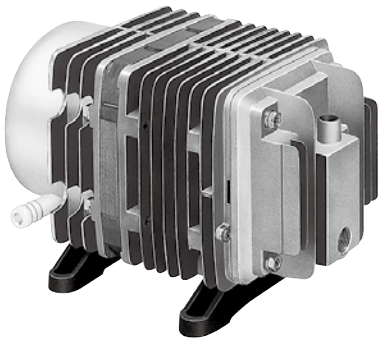

120 V/230 V | 230 V | 230 V

### Airflow & Power Consumption

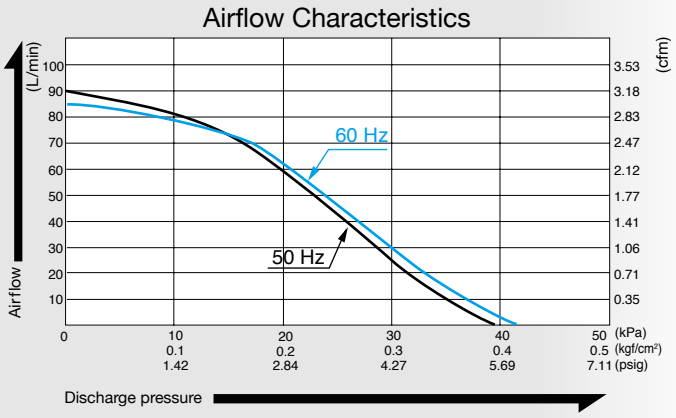


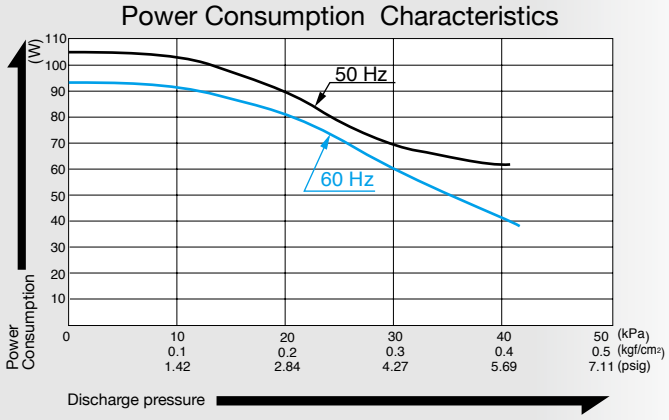


### Specifications

| | | |
|---|---|---|
| Rated Pressure | 10 kPa (0.1 kgf/cm²)<br>0.1 bar<br>1.42 psig | |
| Rated Airflow | 80 L/min<br>2.83 cfm | |
| Maximum Pressure | 40 kPa (0.4 kgf/cm²)<br>0.4 bar<br>5.69 psig | |
| Rated Voltage | 120 V AC | 230 V AC |
| Power Consumption | 88 W | 99 W |
| Rated Frequency | 60 Hz | 50 Hz |
| Rated Performance | 10,000 hours | |
| Outlet | ISO Rc 3/8 | |
| Duty Cycle | Continuous | |
| Coil Insulation Class | Class B for UL | Class E equivalent |
| Mounting Dimensions | 102 (L) x 130 (W) mm<br>4 - 1/64" (L) x 5 - 1/8" (W) | |
| Weight | 4.9 kg<br>10.8 Lbs | |
| Leadwire Length | 300 mm<br>11 - 13/16" | |

### Application Examples

**Air Lifter for Bathtub**

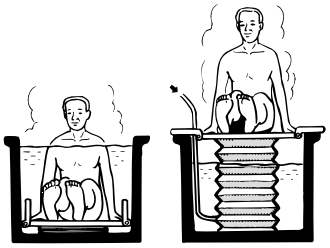

**Liquid Dispenser**

### External Dimensions (Unit: mm)

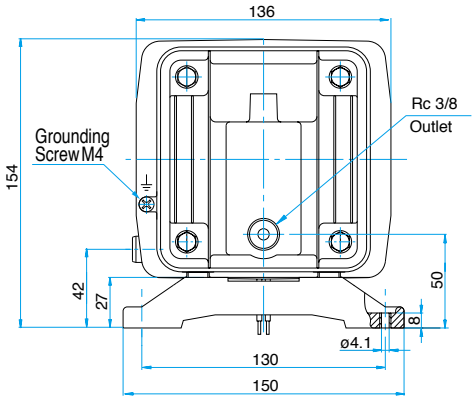


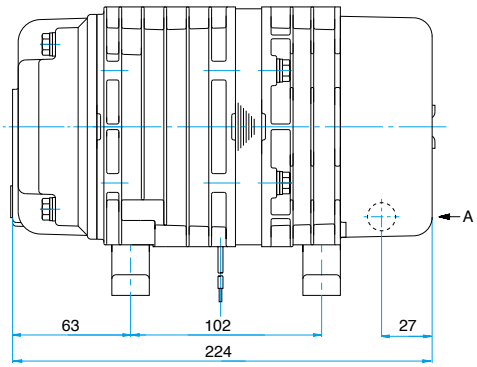


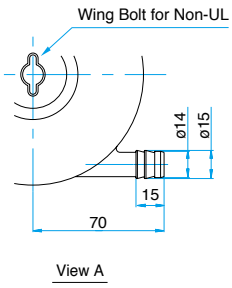

# Compressor

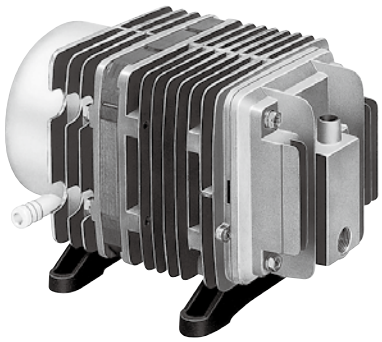

## Model AC0902

115 V | 230 V | 230 V

### Airflow & Power Consumption

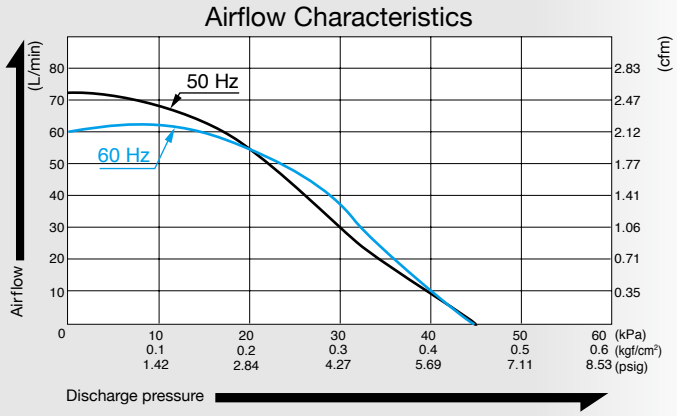


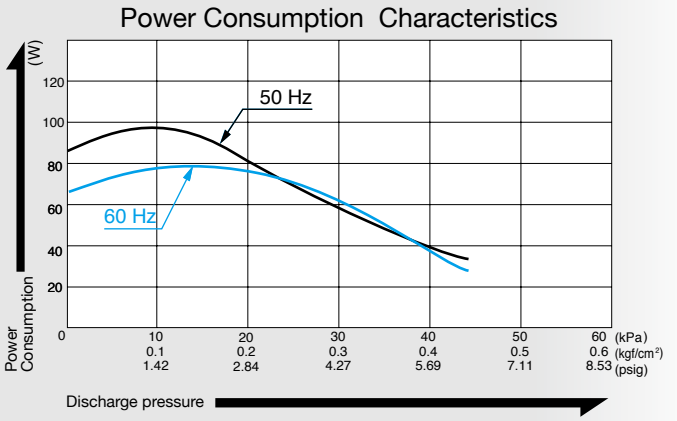


### Specifications

| | | |
|---|---|---|
| Rated Pressure | 20 kPa (0.2 kgf/cm²)<br>0.2 bar<br>2.84 psig | |
| Rated Airflow | 55 L/min<br>1.94 cfm | |
| Maximum Pressure | 45 kPa (0.45 kgf/cm²)<br>0.45 bar<br>6.40 psig | |
| Rated Voltage | 115 V AC | 230 V AC |
| Power Consumption | 75 W | 85 W |
| Rated Frequency | 60 Hz | 50 Hz |
| Rated Performance | 10,000 hours | |
| Outlet | ISO Rc 3/8 | |
| Duty Cycle | Continuous | |
| Coil Insulation Class | Class B for UL | Class E equivalent |
| Mounting Dimensions | 102 (L) x 130 (W) mm<br>4 - 1/64" (L) x 5 - 1/8" (W) | |
| Weight | 4.9 kg<br>10.8 Lbs | |
| Leadwire Length | 300 mm<br>11 - 13/16" | 320 mm<br>12 - 19/32" |

### Application Examples

**Air Lifter for Bathtub**

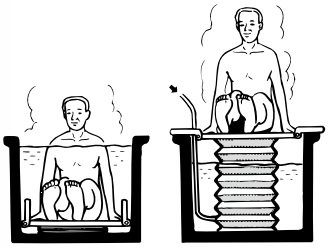

**Liquid Dispenser**

### External Dimensions (Unit: mm)

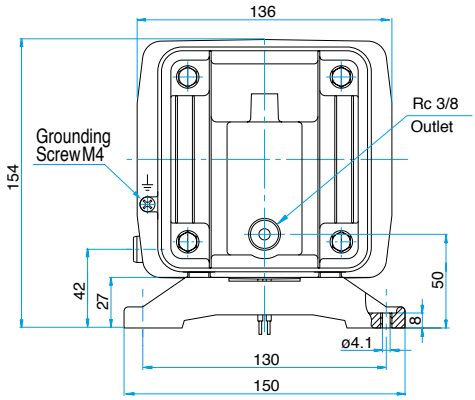


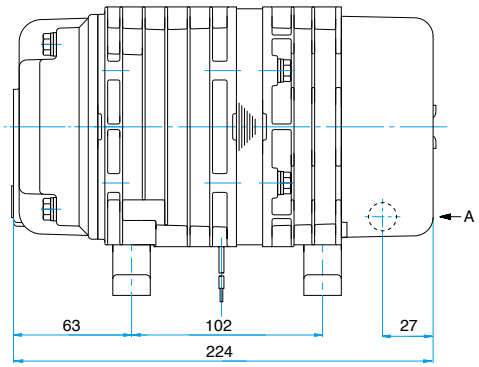


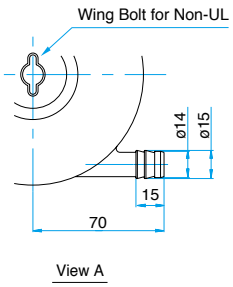

# Compressor

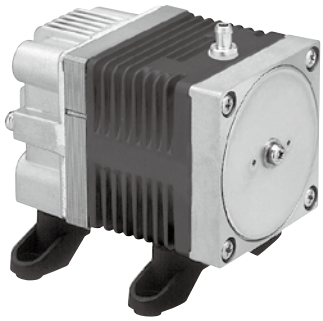

## Model AC0105

115 V | 230 V | 230 V

### Airflow & Power Consumption

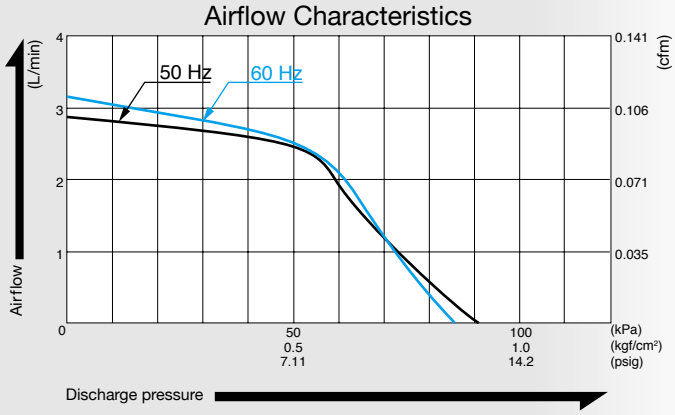


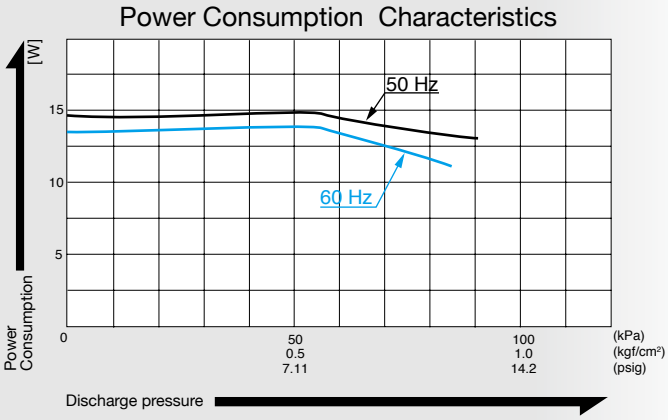


### Specifications

| | | |
|---|---|---|
| Rated Pressure | 50 kPa (0.5 kgf/cm²)<br>0.5 bar<br>7.11 psig | |
| Rated Airflow | 2.5 L/min<br>0.088 cfm | |
| Maximum Pressure | 80 kPa (0.8 kgf/cm²)<br>0.8 bar<br>11.4 psig | |
| Rated Voltage | 115 V AC | 230 V AC |
| Power Consumption | 14 W | 15 W |
| Rated Frequency | 60 Hz | 50 Hz |
| Rated Performance (MTTF) | 5,000 hours | |
| Outlet | 6 mm O.D. hose barb | |
| Duty Cycle | 60 minutes | |
| Coil Insulation Class | Class B for UL | Class E equivalent |
| Mounting Dimensions | 48 (L) x 62 (W) mm<br>1 - 57/64" (L) x 2 - 7/16" (W) | |
| Weight | 0.7 kg<br>1.54 Lbs | |
| Leadwire Length | 200 mm<br>7 - 7/8" | |

### Application Examples

Saline Water Splasher

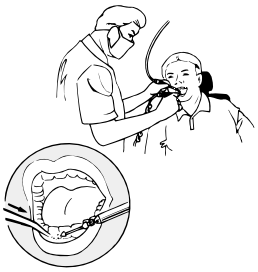

Copy Paper Separator

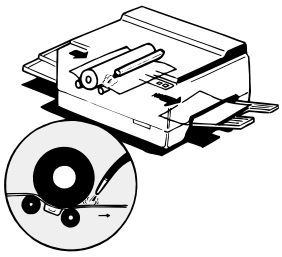

### External Dimensions (Unit: mm)

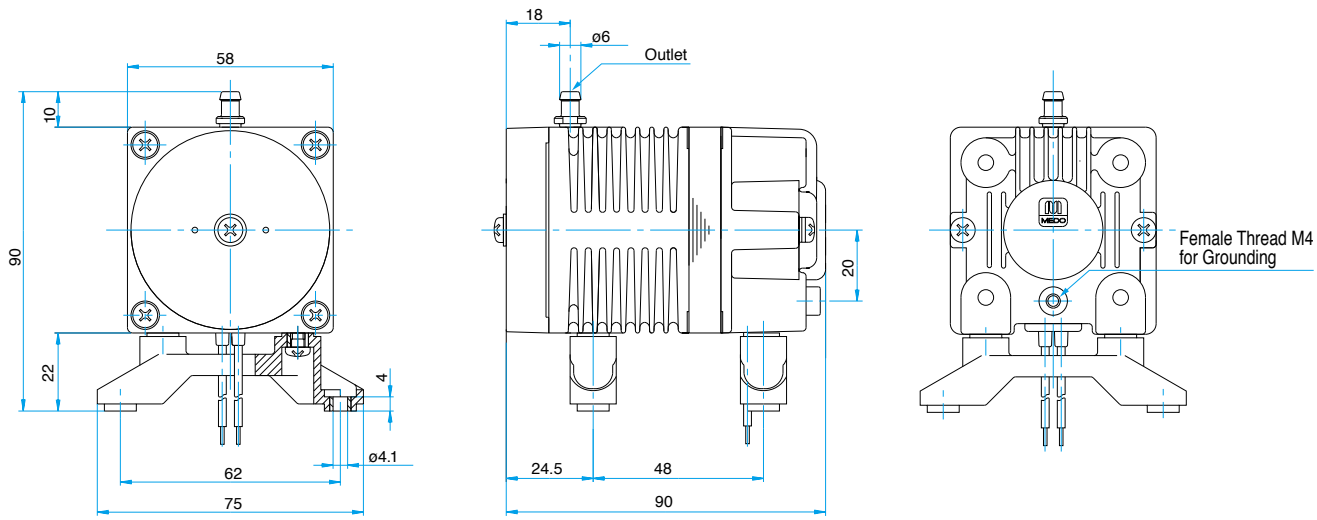

# Compressor

## Model AC0110

115 V is made to order

115 V | 230 V | 230 V

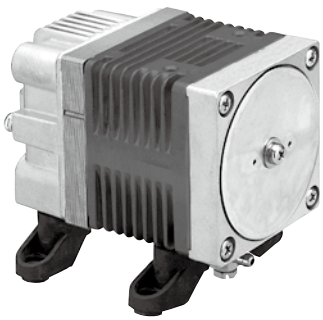

### Airflow & Power Consumption

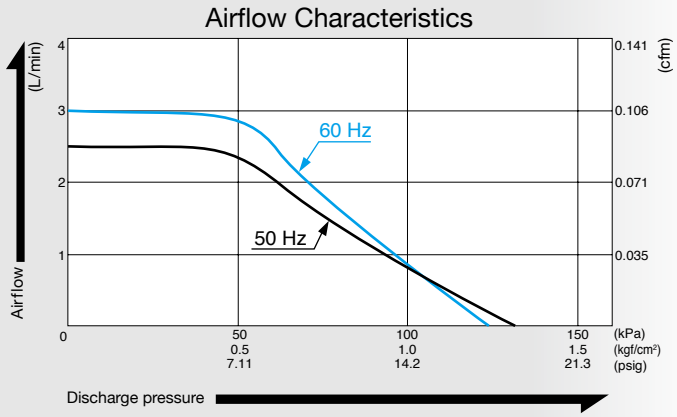


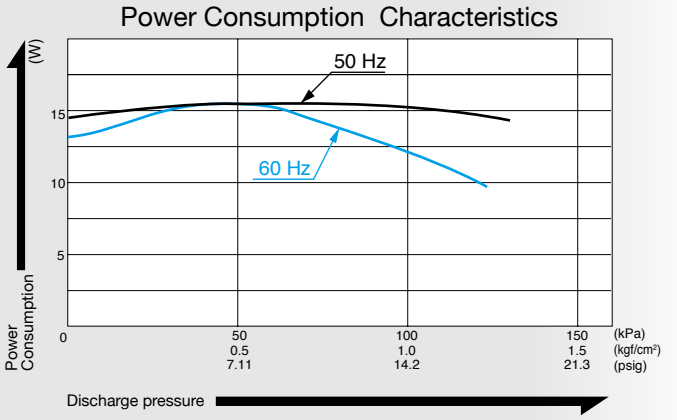


### Specifications

| | | |
|---|---|---|
| Rated Pressure | 100 kPa (1.0 kgf/cm²)<br>1.0 bar<br>14.2 psig | |
| Rated Airflow | 0.8 L/min<br>0.028 cfm | |
| Maximum Pressure | 120 kPa (1.2 kgf/cm²)<br>1.2 bar<br>17.1 psig | |
| Rated Voltage | 115 V AC | 230 V AC |
| Power Consumption | 12 W | 15 W |
| Rated Frequency | 60 Hz | 50 Hz |
| Rated Performance (MTTF) | 4,000 hours | |
| Outlet | 6 mm O.D. hose barb | |
| Duty Cycle | 30 minutes | |
| Coil Insulation Class | Class B for UL | Class E equivalent |
| Mounting Dimensions | 48 (L) x 62 (W) mm<br>1 - 57/64" (L) x 2 - 7/16" (W) | |
| Weight | 0.7 kg<br>1.54 Lbs | |
| Leadwire Length | 200 mm<br>7 - 7/8" | |

### Application Examples

**Automatic Dispenser**

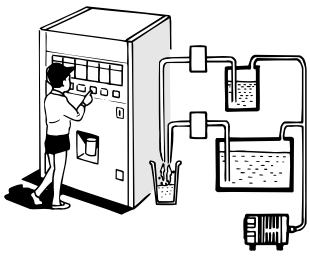

### External Dimensions (Unit: mm)

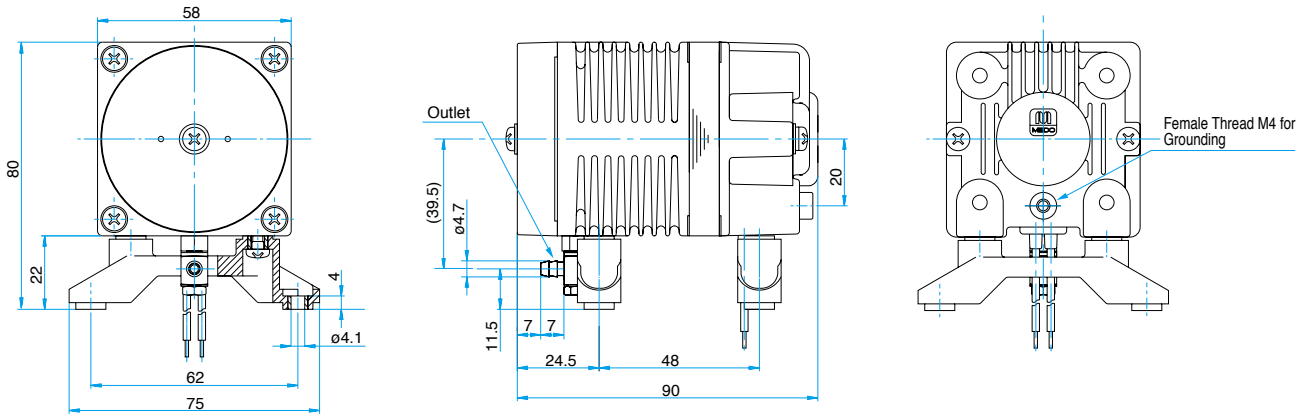

# Compressor

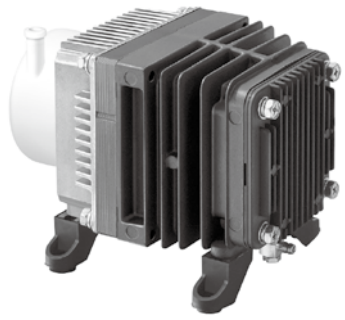

## Model AC0207

115 V | 230 V | 230 V

### Airflow & Power Consumption

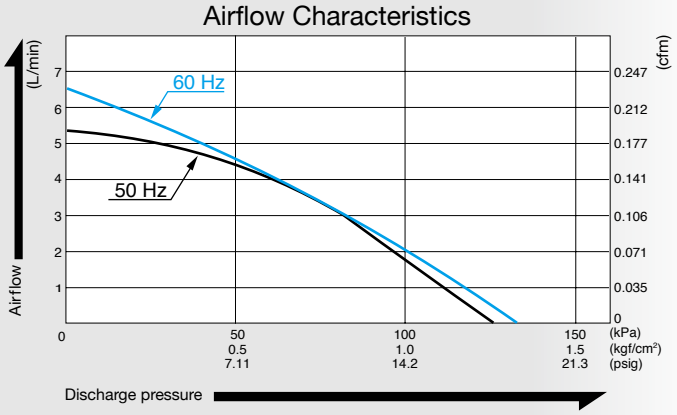


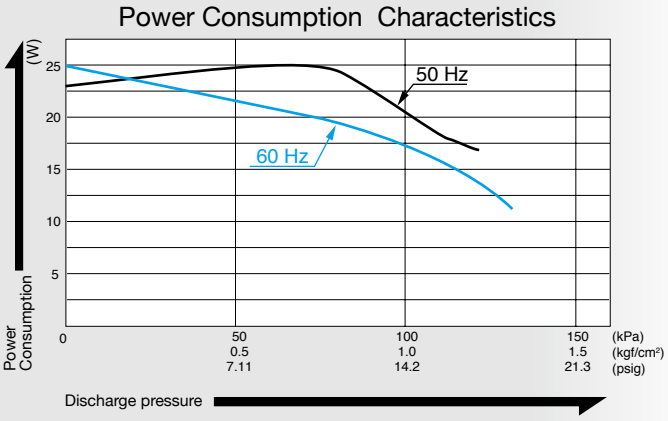


### Specifications

| | | |
|---|---|---|
| Rated Pressure | 70 kPa (0.7 kgf/cm²)<br>0.7 bar<br>9.96 psig | |
| Rated Airflow | 3.5 L/min<br>0.124 cfm | |
| Maximum Pressure | 100 kPa (1.0 kgf/cm²)<br>1.0 bar<br>14.2 psig | |
| Rated Voltage | 115 V AC | 230 V AC |
| Power Consumption | 20 W | 25 W |
| Rated Frequency | 60 Hz | 50 Hz |
| Rated Performance | 3,000 hours | |
| Outlet | 4.7 mm O.D. hose barb | |
| Duty Cycle | Continuous | |
| Coil Insulation Class | Class B for UL | Class E equivalent |
| Mounting Dimensions | 75 (L) x 88 (W) mm<br>2 - 61/64" (L) x 3 - 15/32" (W) | |
| Weight | 1.7 kg<br>3.7 Lbs | |
| Leadwire Length | 200 mm<br>7 - 7/8" | |

### Application Examples

**Air Bearing for Precision Machines**

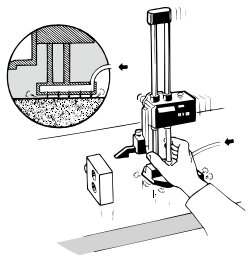

**Nebulizer**

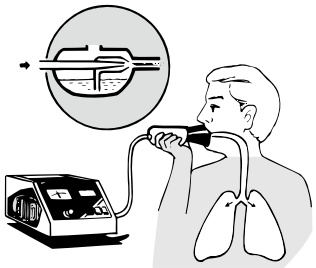

### External Dimensions (Unit: mm)

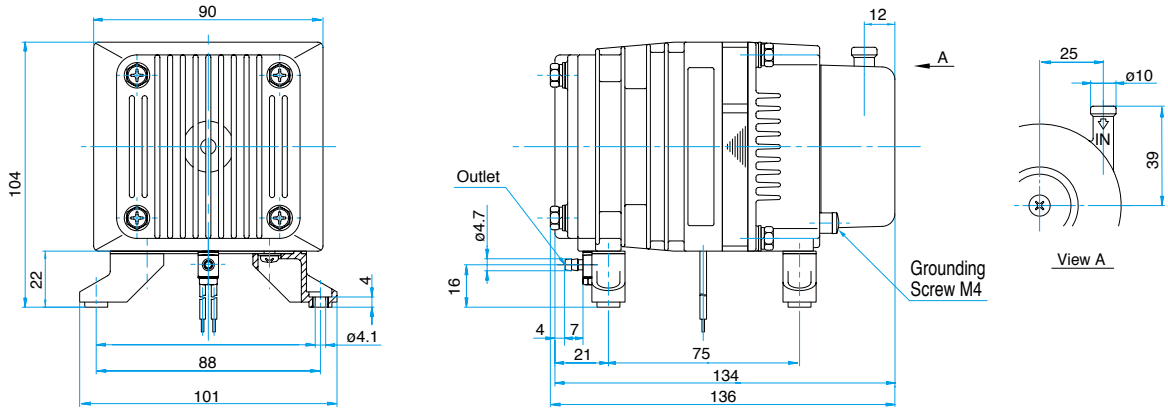

# Compressor

## Model AC0410A

120 V is made to order

CE 230 V | UKCA 230 V

### Airflow & Power Consumption

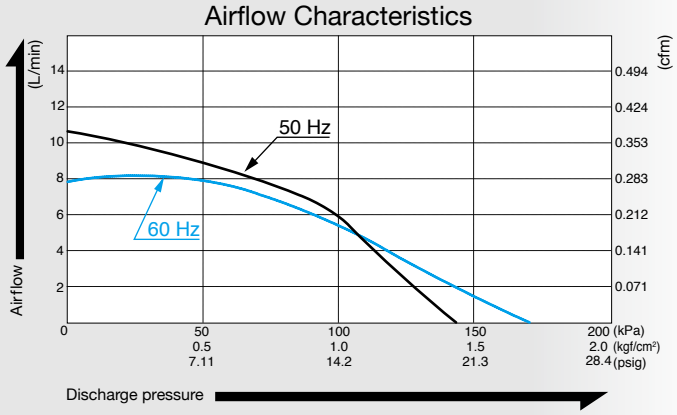


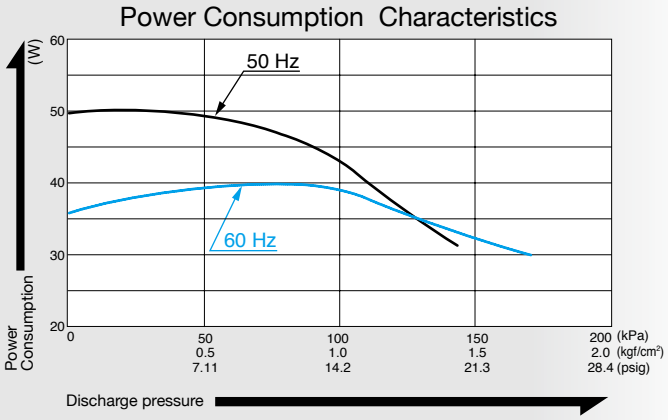


### Specifications

| | | |
|---|---|---|
| Rated Pressure | 100 kPa (1.0 kgf/cm²)<br>1.0 bar<br>14.2 psig | |
| Rated Airflow | 5 L/min<br>0.177 cfm | |
| Maximum Pressure | 130 kPa (1.3 kgf/cm²)<br>1.3 bar<br>18.5 psig | |
| Rated Voltage | 120 V AC | 230 V AC |
| Power Consumption | 39 W | 43 W |
| Rated Frequency | 60 Hz | 50 Hz |
| Rated Performance | 3,000 hours | |
| Outlet | ISO Rc 1/4 | |
| Duty Cycle | Continuous | |
| Coil Insulation Class | Class B equivalent | |
| Mounting Dimensions | 68 (L) x 98 (W) mm<br>2 - 43/64" (L) x 3 - 55/64" (W) | |
| Weight | 2.1 kg<br>4.6 Lbs | |
| Leadwire Length | 220 mm<br>8 - 21/32" | 170 mm<br>6 - 11/16" |

### Application Examples

Industrial Sewing Machine

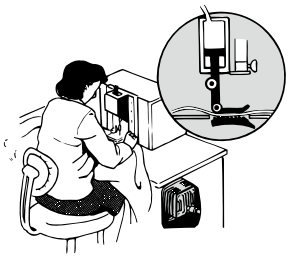

Various Aerosol Sprays

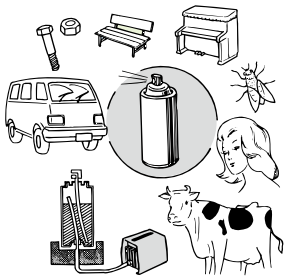

### External Dimensions (Unit: mm)

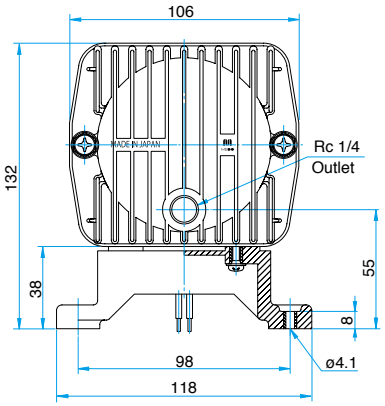


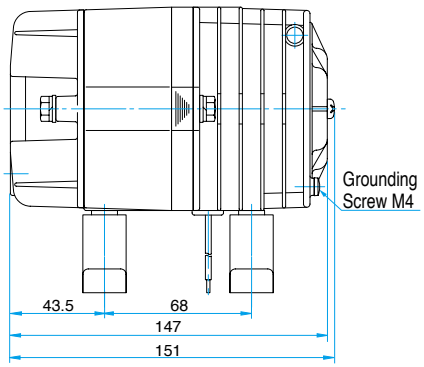

# Compressor

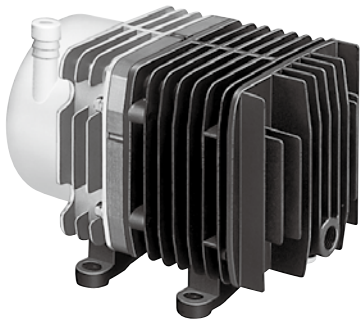

## Model AC0610

115 V | 230 V | 230 V

### Airflow & Power Consumption

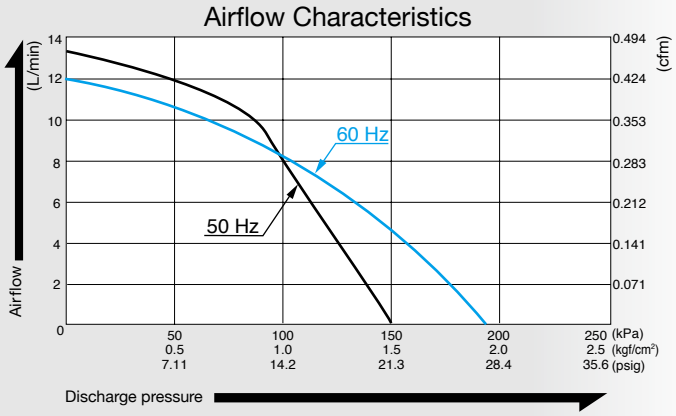


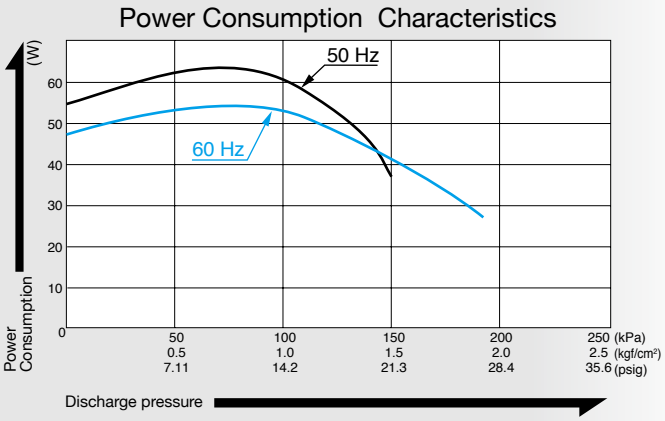


### Specifications

| | | |
|---|---|---|
| Rated Pressure | 100 kPa (1.0 kgf/cm²)<br>1.0 bar<br>14.2 psig | |
| Rated Airflow | 8 L/min<br>0.283 cfm | |
| Maximum Pressure | 150 kPa (1.5 kgf/cm²)<br>1.5 bar<br>21.3 psig | |
| Rated Voltage | 115 V AC | 230 V AC |
| Power Consumption | 52 W | 60 W |
| Rated Frequency | 60 Hz | 50 Hz |
| Rated Performance | 3,000 hours | |
| Outlet | ISO Rc 1/4 | |
| Duty Cycle | Continuous | |
| Coil Insulation Class | Class B for UL | Class E equivalent |
| Mounting Dimensions | 68 (L) x 84 (W) mm<br>2 - 43/64" (L) x 3 - 5/16" (W) | |
| Weight | 3.2 kg<br>7.1 Lbs | |
| Leadwire Length | 200 mm<br>7 - 7/8" | |

### Application Examples

**Dispenser**

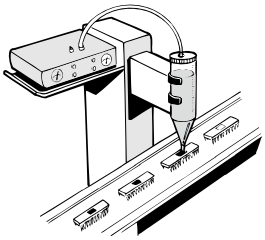

**Automatic Stamper**

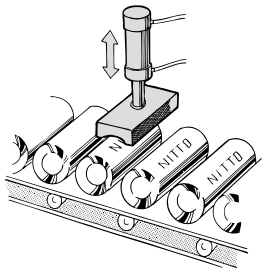


### External Dimensions (Unit: mm)

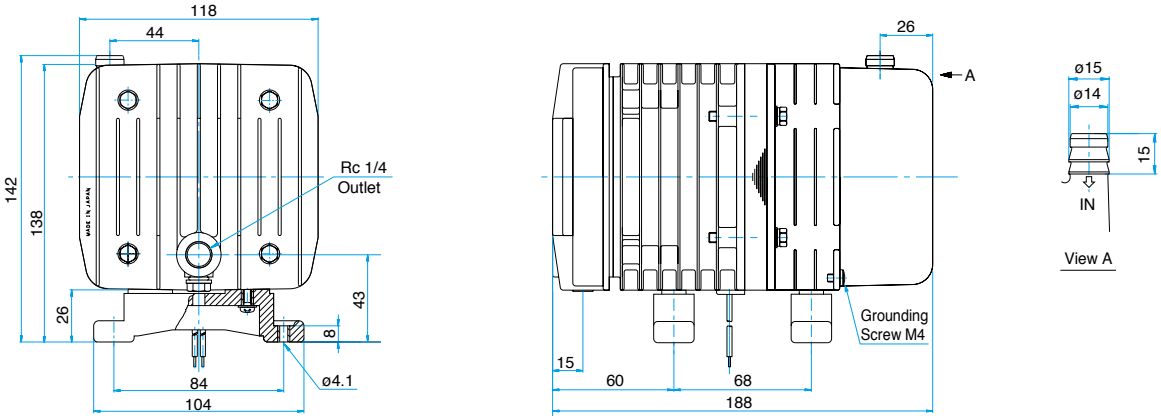

# Compressor

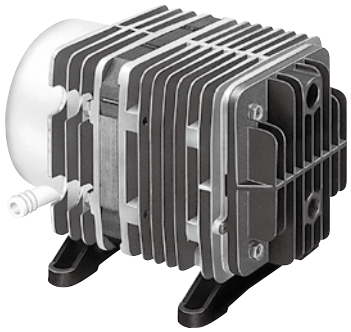

## Model AC0910

115 V/230 V | 230 V | 230 V

### Airflow & Power Consumption

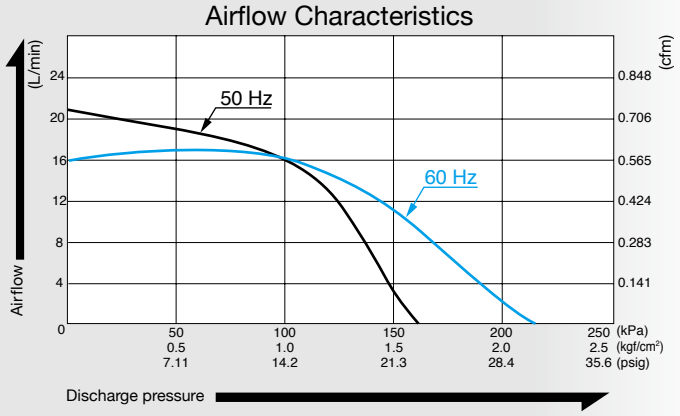


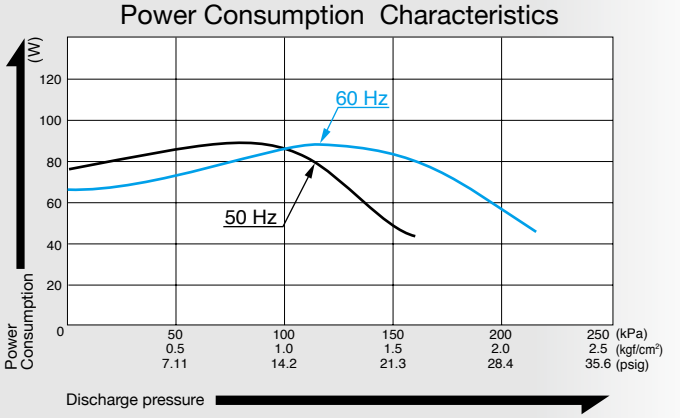


### Specifications

| | | |
|---|---|---|
| Rated Pressure | 100 kPa (1.0 kgf/cm²)<br>1.0 bar<br>14.2 psig | |
| Rated Airflow | 16 L/min<br>0.57 cfm | |
| Maximum Pressure | 150 kPa (1.5 kgf/cm²)<br>1.5 bar<br>21.3 psig | |
| Rated Voltage | 115 V AC | 230 V AC |
| Power Consumption | 85 W | 90 W |
| Rated Frequency | 60 Hz | 50 Hz |
| Rated Performance | 3,000 hours | |
| Outlet | ISO Rc 1/4 | |
| Duty Cycle | Continuous | |
| Coil Insulation Class | Class B for UL | |
| Mounting Dimensions | 102 (L) x 130 (W) mm<br>4 - 1/64" (L) x 5 - 1/8" (W) | |
| Weight | 4.9 kg<br>10.8 Lbs | |
| Leadwire Length | 300 mm<br>11 - 13/16" | 320 mm<br>12 - 19/32" |

### Application Examples

Sealant gun

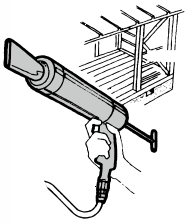

Air Cylinder /Chuck Driver

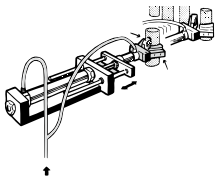

Leakage Tester

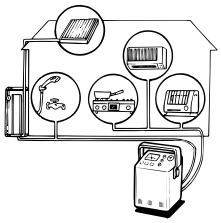

### External Dimensions (Unit: mm)

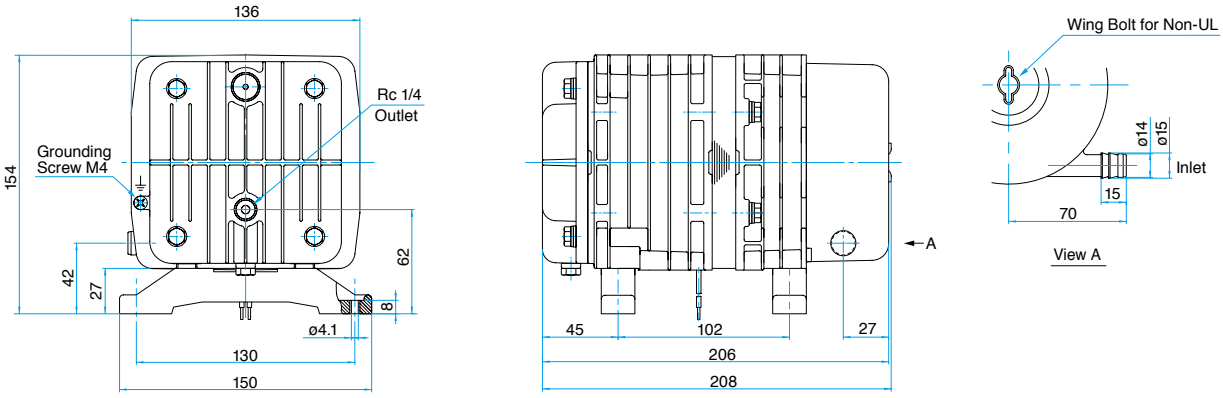

# Compressor

## Model AC0920

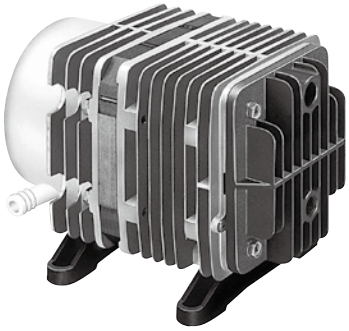

115 V (60 Hz) | 230 V (50 Hz) | 230 V (50 Hz)

### Airflow & Power Consumption

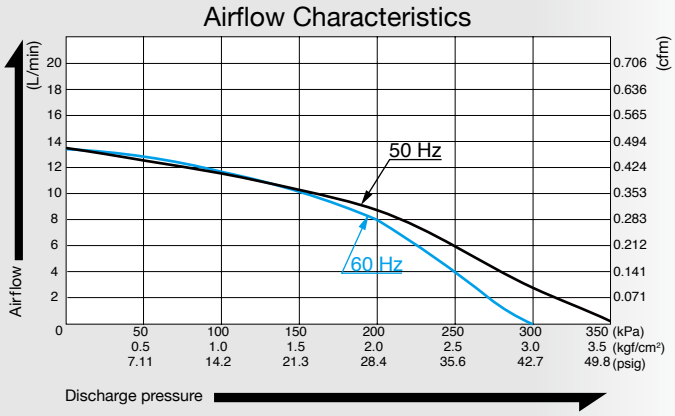


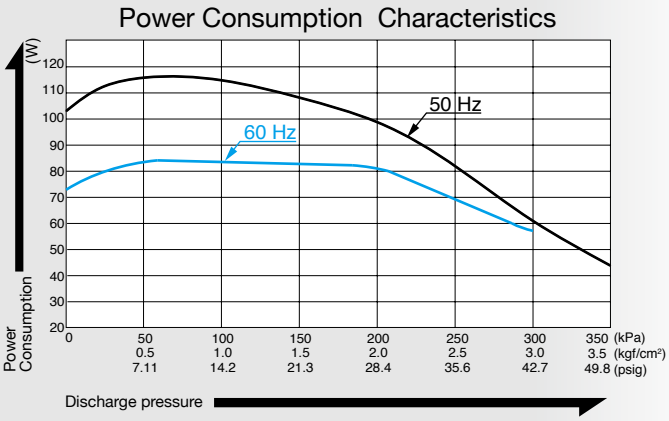


### Specifications

| | | |
|---|---|---|
| Rated Pressure | 200 kPa (2.0 kgf/cm²)<br>2.0 bar<br>28.4 psig | |
| Rated Airflow | 8 L/min<br>0.283 cfm | |
| Maximum Pressure | 280 kPa (2.8 kgf/cm²)<br>2.8 bar<br>39.8 psig | 350 kPa (3.5 kgf/cm²)<br>3.4 bar<br>49.7 psig |
| Rated Voltage | 115 V AC | 230 V AC |
| Power Consumption | 81 W | 100 W |
| Rated Frequency | 60 Hz | 50 Hz |
| Rated Performance | 3,000 hours | |
| Outlet | ISO Rc 1/4 | |
| Duty Cycle | 30 minutes | |
| Coil Insulation Class | Class B for UL | Class E equivalent |
| Mounting Dimensions | 102 (L) x 130 (W) mm<br>4 - 1/64" (L) x 5 - 1/8" (W) | |
| Weight | 5 kg<br>11 Lbs | |
| Leadwire Length | 300 mm<br>11 - 13/16" | 150 mm<br>5 - 29/32" |

### Application Examples

**Air Cylinder/Chuck Driver**

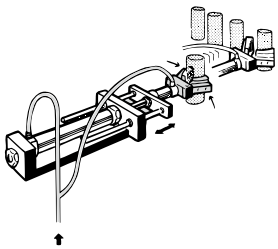

**Leakage Tester**

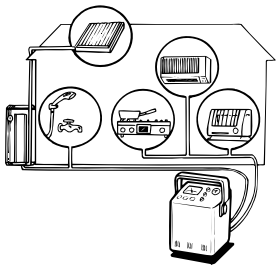

### External Dimensions (Unit: mm)

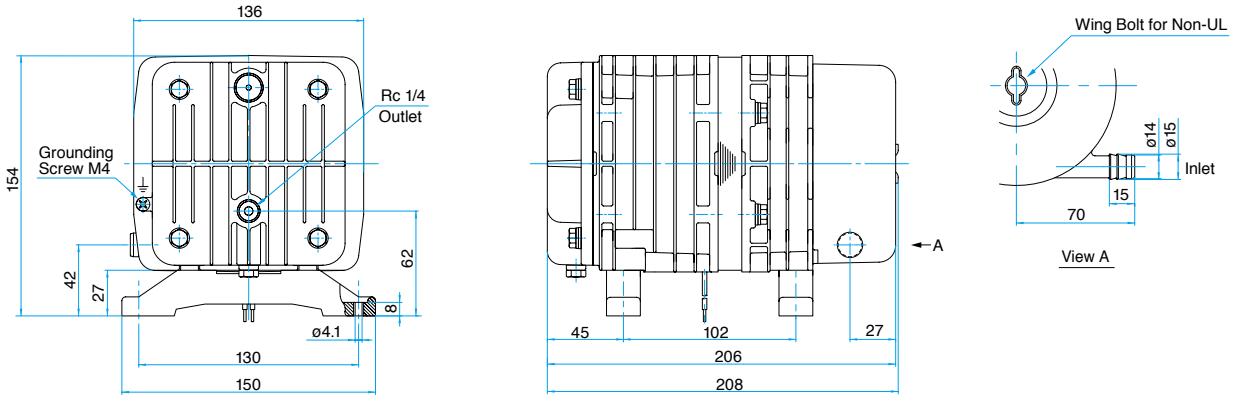

AC LINEAR
Free Piston Vacuum Pump

# VACUUM PUMP

## VP series

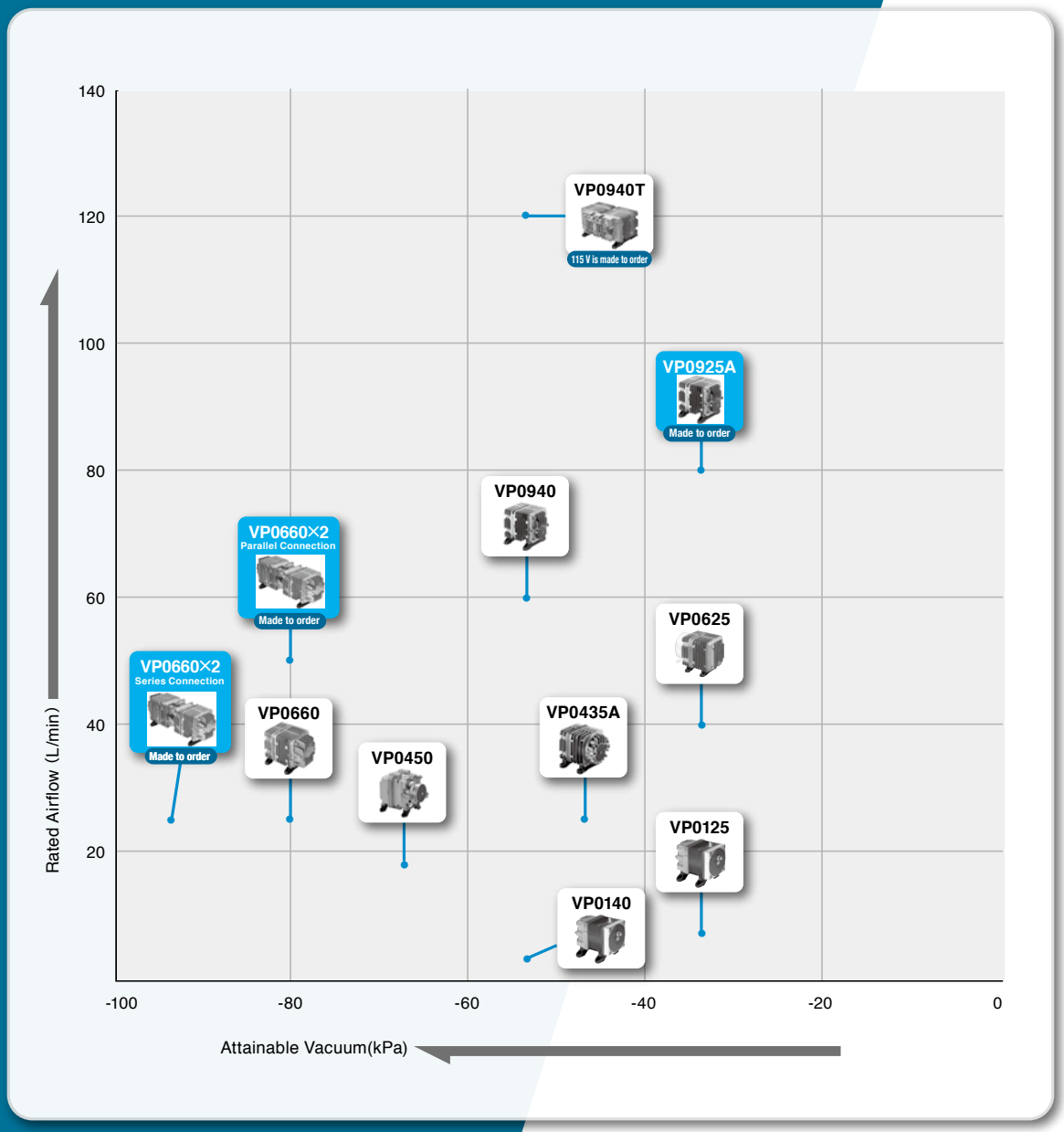



Page

VP0125 — 29
VP0140 — 30
VP0435A — 31
VP0450 — 32
VP0625 — 33
VP0660 — 34
VP0940 — 35
VP0940T — 36

Made to Order

VP0925A — 103
VP0660 x 2 — 104

# Vacuum Pump

## Model VP0125

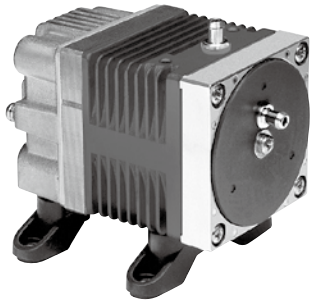

115 V/230 V | 230 V | 230 V

### Airflow & Power Consumption

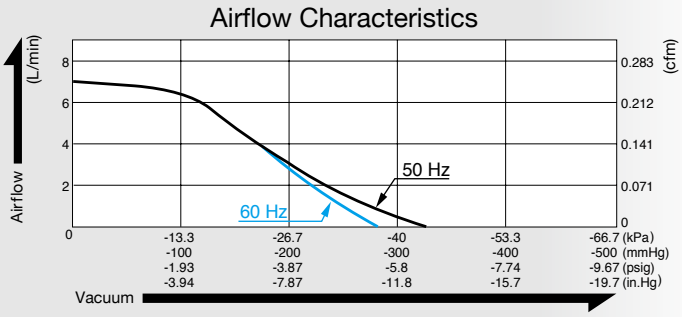


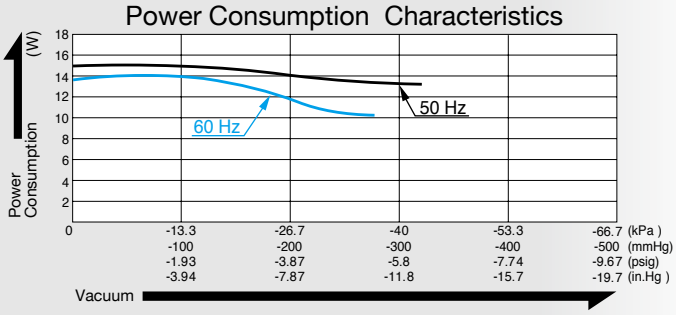


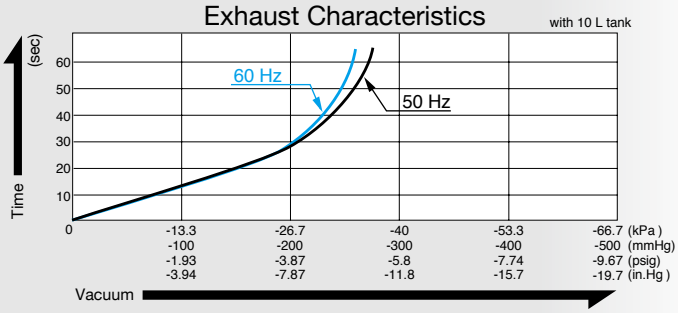


### Specifications

| | | |
|---|---|---|
| Attainable Vacuum | -33.3 kPa (-250 mmHg)<br>-333 mbar<br>-9.84 in. Hg | |
| Free Air Displacement | 7 L/min<br>0.247 cfm | |
| Rated Voltage | 115 V AC | 230 V AC |
| Power Consumption | 14 W | 15 W |
| Rated Frequency | 60 Hz | 50 Hz |
| Rated Performance (MTTF) | 10,000 hours | |
| Inlet | 6 mm O.D. hose barb | |
| Outlet | 6 mm O.D. hose barb | |
| Duty Cycle | Continuous | |
| Coil Insulation Class | Class B for UL | |
| Mounting Dimensions | 48 (L) x 62 (W) mm<br>1 - 57/64" (L) x 2 - 7/16" (W) | |
| Weight | 0.7 kg<br>1.54 Lbs | |
| Leadwire Length | 200 mm<br>7 - 7/8" | |

### Application Examples

**Dripping Machine**

**Paper Card Dispenser**

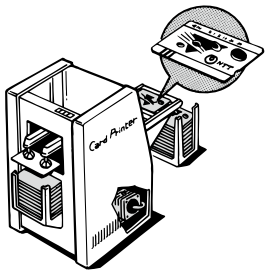

### External Dimensions (Unit: mm)

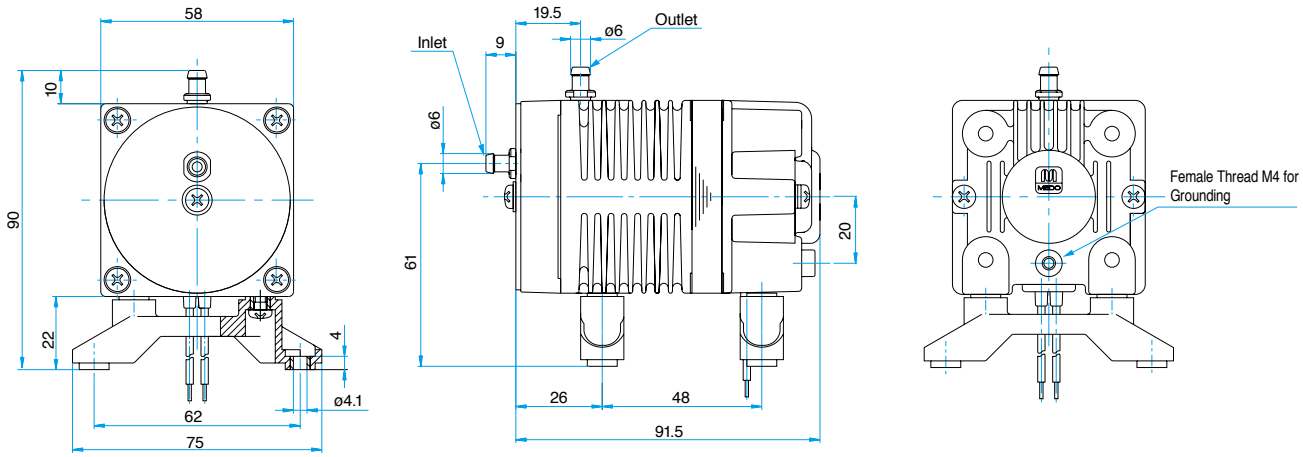

# Vacuum Pump

## Model VP0140

115 V | 230 V | 230 V

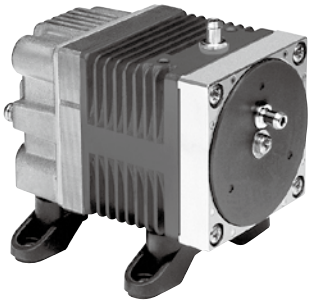

### Airflow & Power Consumption

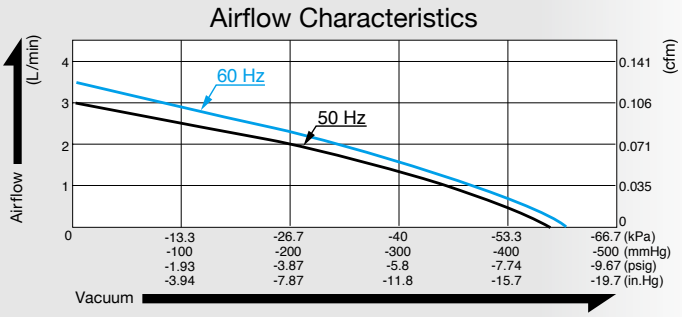


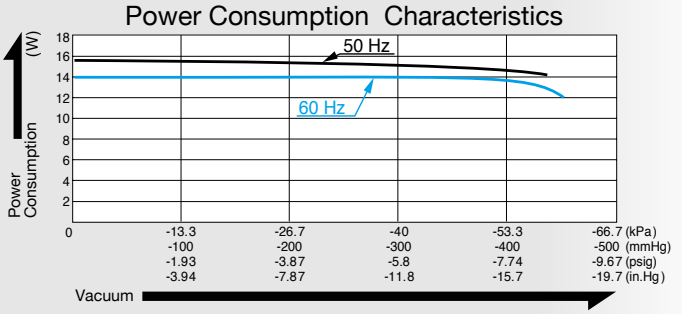


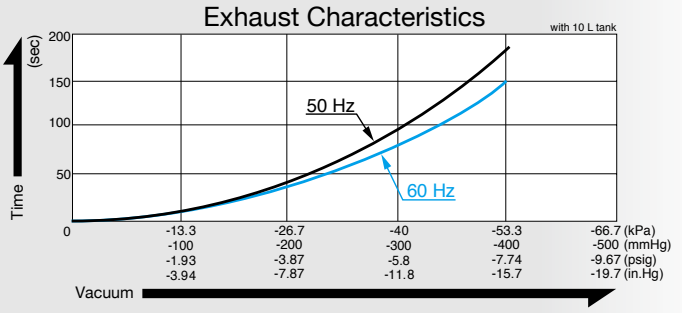


### Specifications

| | | |
|---|---|---|
| Attainable Vacuum* | -53.3 kPa (-400 mmHg)<br>-533 mbar<br>-15.7 in. Hg | |
| Free Air Displacement | 3 L/min<br>0.106 cfm | |
| Rated Voltage | 115 V AC | 230 V AC |
| Power Consumption | 14 W | 15 W |
| Rated Frequency | 60 Hz | 50 Hz |
| Rated Performance (MTTF) | 5,000 hours | |
| Inlet | 6 mm O.D. hose barb | |
| Outlet | 6 mm O.D. hose barb | |
| Duty Cycle | 60 minutes | |
| Coil Insulation Class | Class B for UL | Class E equivalent |
| Mounting Dimensions | 48 (L) x 62 (W) mm<br>1 - 57/64" (L) x 2 - 7/16" (W) | |
| Weight | 0.7 kg<br>1.54 Lbs | |
| Leadwire Length | 200 mm<br>7 - 7/8" | |

*Operations at higher than -53.5 kPa need an additional leak valve or relief valve on the inlet piping.

### Application Examples

**Dripping Machine**

**Paper Card Dispenser**

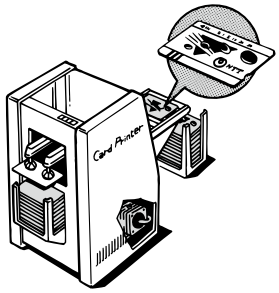


### External Dimensions (Unit: mm)

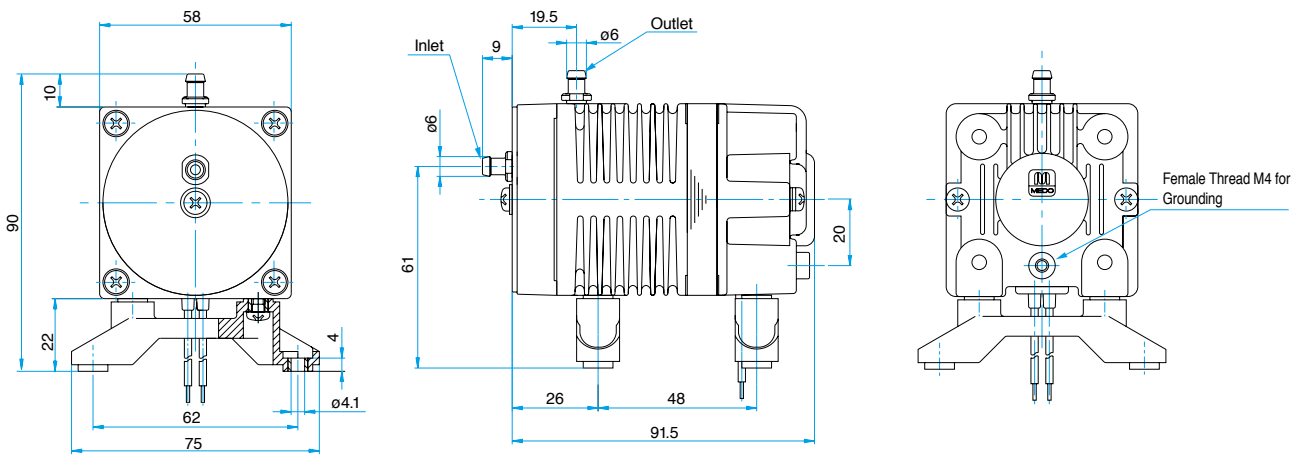

# Vacuum Pump

## Model VP0435A

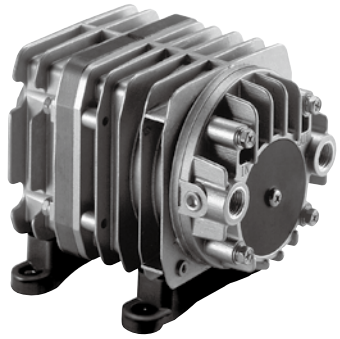

115 V | 230 V | 230 V

### Airflow & Power Consumption

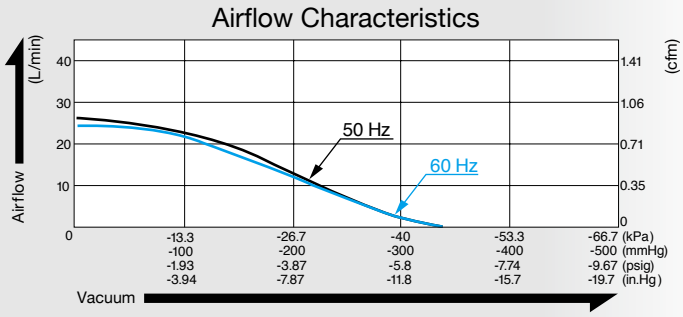


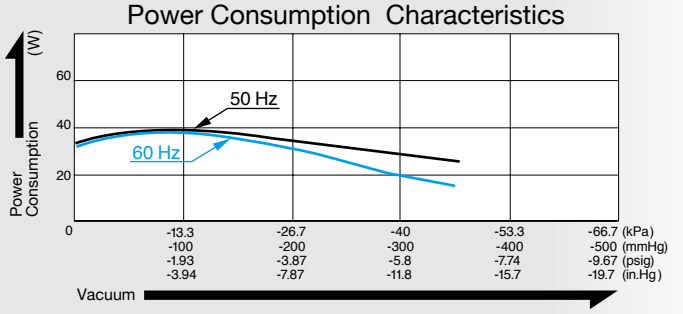


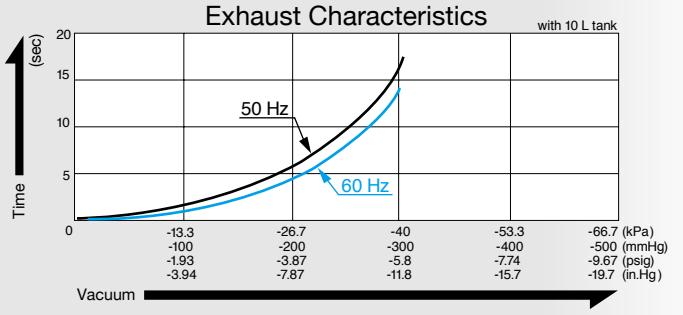


### Specifications

| | | |
|---|---|---|
| Attainable Vacuum | -46.7 kPa (-350 mmHg)<br>-467 mbar<br>-13.8 in. Hg | |
| Free Air Displacement | 25 L/min<br>0.88 cfm | |
| Rated Voltage | 115 V AC | 230 V AC |
| Power Consumption | 39 W | |
| Rated Frequency | 60 Hz | 50 Hz |
| Rated Performance | 3,000 hours | |
| Inlet | 15 mm O.D. hose barb | |
| Outlet | ISO Rc 1/4 | |
| Duty Cycle | Continuous | |
| Coil Insulation Class | Class B for UL | Class B equivalent |
| Mounting Dimensions | 68 (L) x 84 (W) mm<br>2 - 43/64" (L) x 3 - 5/16" (W) | |
| Weight | 2.3 kg<br>5.1 Lbs | |
| Leadwire Length | 300 mm<br>11 - 13/16" | 550 mm<br>21 - 21/32" |

### Application Examples

Machine Screw Feeder

Air Sampler

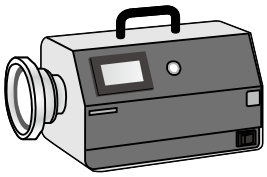

### External Dimensions (Unit: mm)

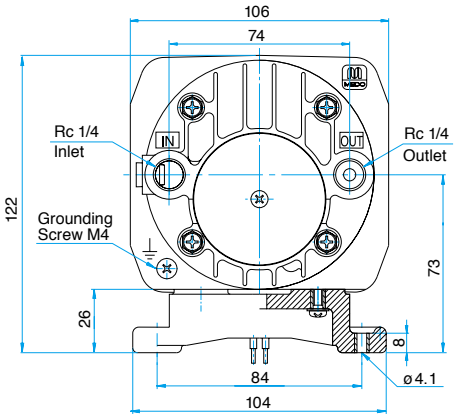


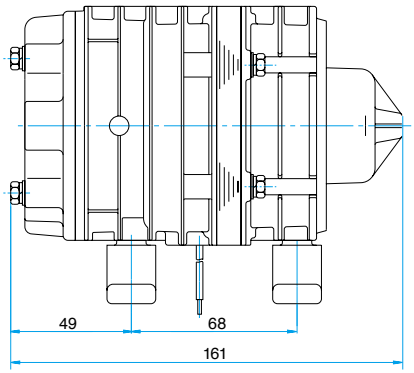

# Vacuum Pump

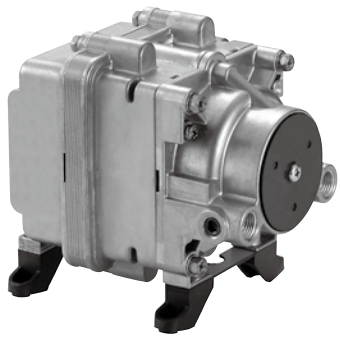

## Model VP0450

120 V | 230 V | 230 V

### Airflow & Power Consumption

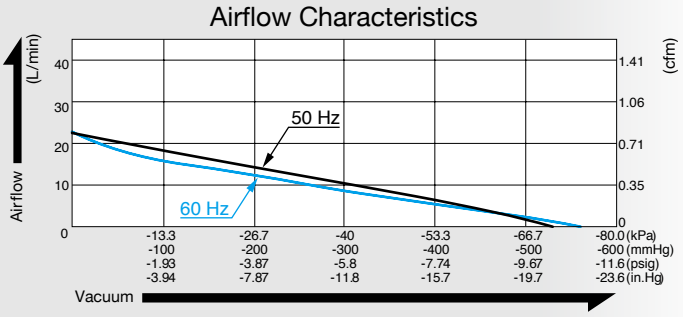


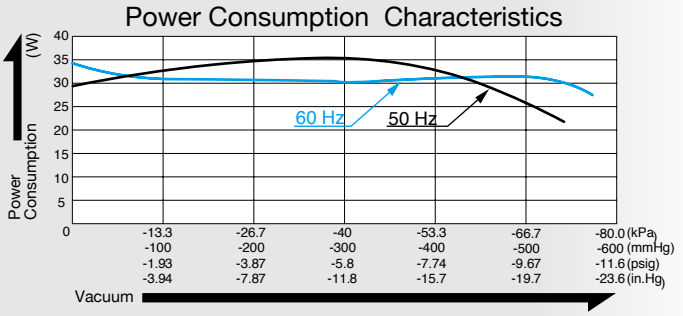


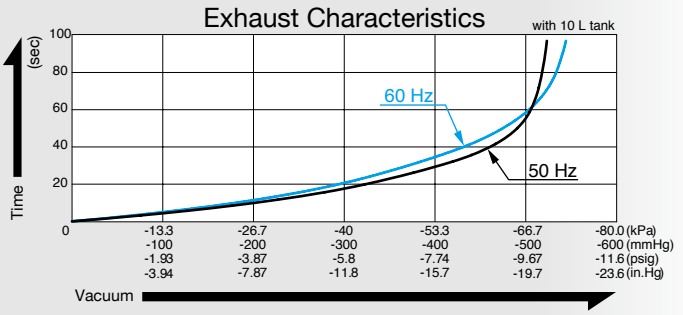


### Specifications

| | | |
|---|---|---|
| Attainable Vacuum | -66.7 kPa (-500 mmHg)<br>-667 mbar<br>-19.7 in. Hg | |
| Free Air Displacement | 18 L/min<br>0.64 cfm | |
| Rated Voltage | 120 V AC | 230 V AC |
| Power Consumption | 34 W | 35 W |
| Rated Frequency | 60 Hz | 50 Hz |
| Rated Performance | 10,000 hours | |
| Inlet | ISO Rc 1/4 | |
| Outlet | ISO Rc 1/4 | |
| Duty Cycle | Continuous | |
| Coil Insulation Class | Class A for UL | Class E equivalent |
| Mounting Dimensions | 85 (L) x 88 (W) mm<br>3 - 11/32" (L) x 3 - 15/32" (W) | |
| Weight | 2.2 kg<br>4.9 Lbs | |
| Leadwire Length | 300 mm<br>11 - 13/16" | |

### Application Examples

**Machine Screw Feeder**

**Air Sampler**

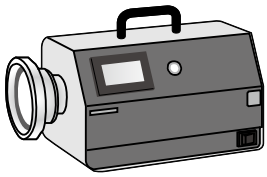

### External Dimensions (Unit: mm)

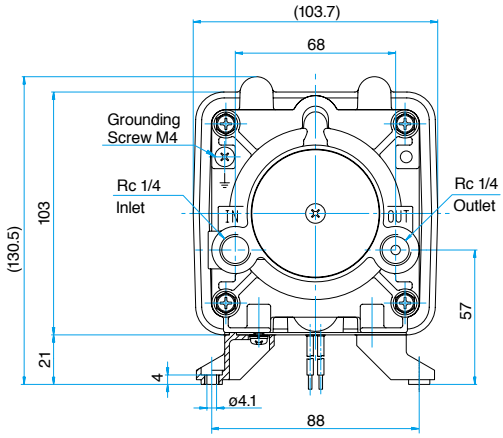


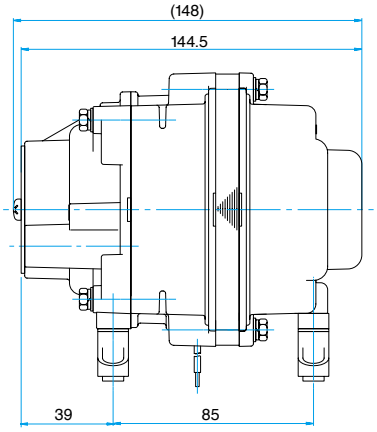

# Vacuum Pump

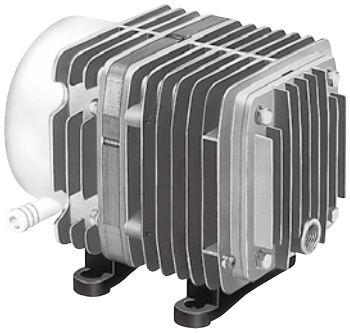

## Model VP0625

115 V/230 V | 230 V | 230 V

### Airflow & Power Consumption

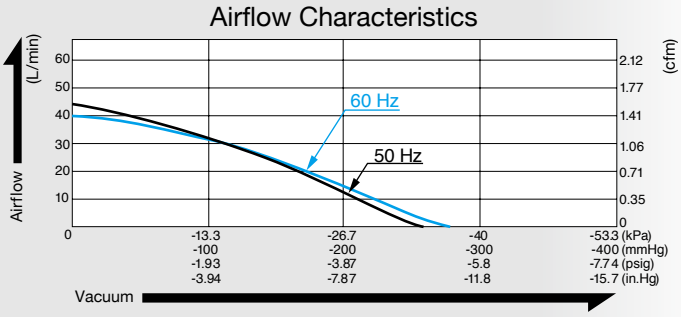


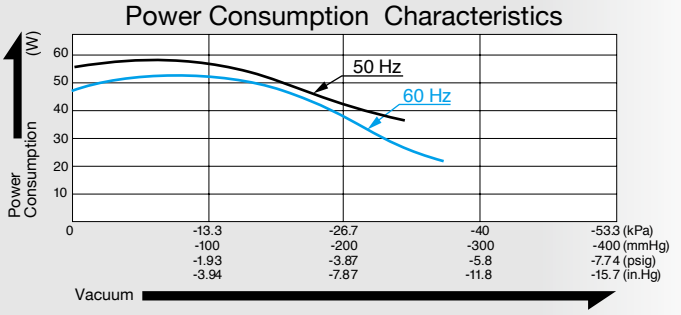


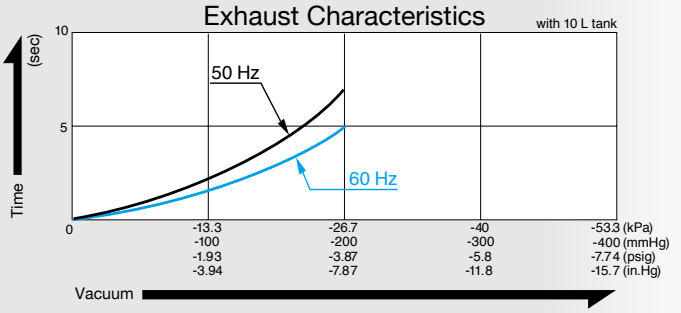


### Specifications

| | | |
|---|---|---|
| Attainable Vacuum | -33.3 kPa (-250 mmHg)<br>-333 mbar<br>-9.84 in. Hg | |
| Free Air Displacement | 40 L/min<br>1.41 cfm | |
| Rated Voltage | 115 V AC | 230 V AC |
| Power Consumption | 60 W | |
| Rated Frequency | 60 Hz | 50 Hz |
| Rated Performance | 10,000 hours | |
| Inlet | 15mm O.D. hose barb | |
| Outlet | ISO Rc 1/4 | |
| Duty Cycle | Continuous | |
| Coil Insulation Class | Class B for UL | |
| Mounting Dimensions | 68 (L) x 84 (W) mm<br>2 - 43/64" (L) x 3 - 5/16" (W) | |
| Weight | 3 kg<br>6.6 Lbs | |
| Leadwire Length | 235 mm<br>9 - 1/4" | 320 mm<br>12 - 19/32" |

### Application Examples

Microfiche Camera

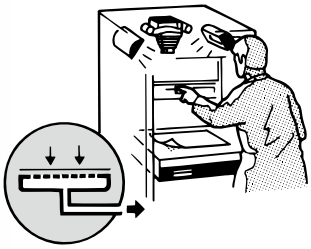

Solar Collection Screen

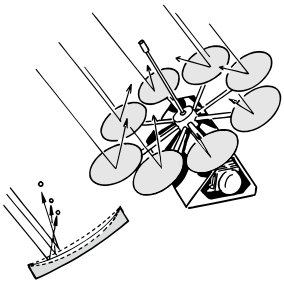

### External Dimensions (Unit: mm)

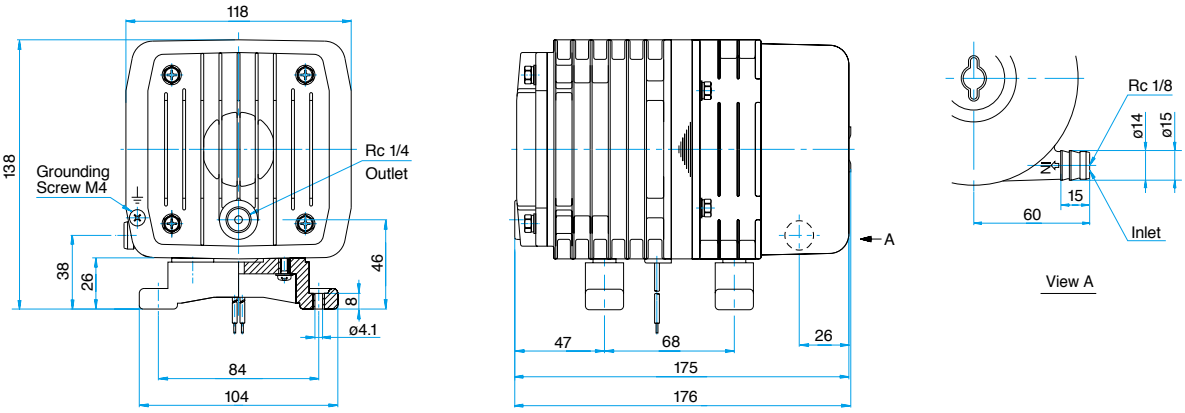

# Vacuum Pump

## Model VP0660

115 V (60 Hz) | 230 V (50 Hz) | 230 V (50 Hz)

### Airflow & Power Consumption

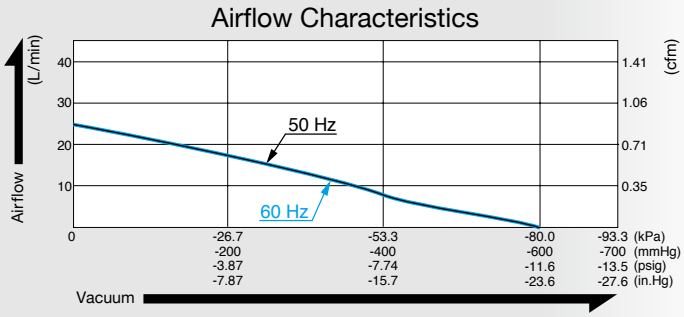


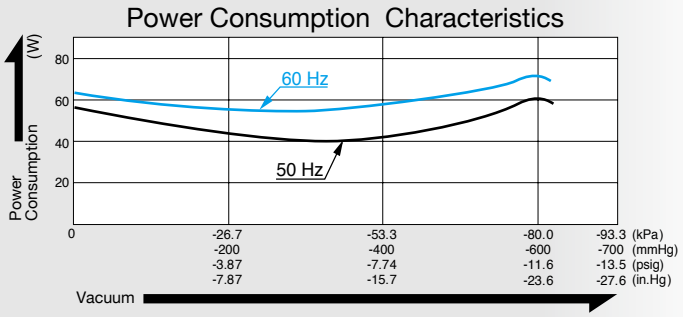


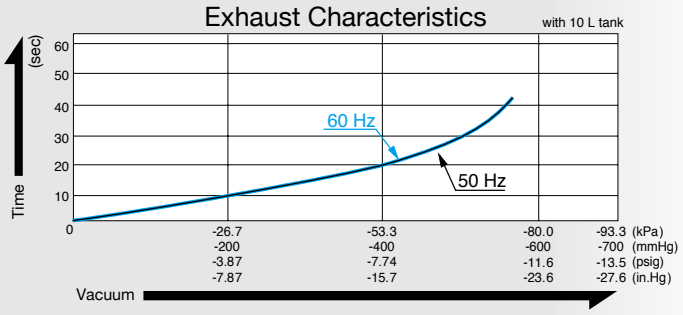


### Specifications

| | | |
|---|---|---|
| Attainable Vacuum *1 | -80 kPa (-600 mmHg)<br>-800 mbar<br>-23.6 in. Hg | |
| Free Air Displacement | 25 L/min<br>0.88 cfm | |
| Rated Voltage | 115 V AC | 230 V AC |
| Power Consumption | 70 W | 60 W |
| Rated Frequency | 60 Hz | 50 Hz |
| Rated Performance | 6,000 hours | |
| Inlet | ISO Rc 1/4 | |
| Outlet | ISO Rc 1/4 | |
| Duty Cycle | Continuous | |
| Coil Insulation Class | Class B for UL | Class E equivalent |
| Mounting Dimensions | 102 (L) x 130 (W) mm<br>4 - 1/64" (L) x 5 - 1/8" (W) | |
| Weight | 5 kg<br>11 Lbs | |
| Leadwire Length | 300 mm<br>11 - 13/16" | 600 mm<br>23 - 5/8" |

*1: Operations at higher than -80 kPa need an additional leak valve or relief valve on the inlet piping.

### Application Examples

**Vacuum Material Handling Equipment**

**Vacuum Chucking**

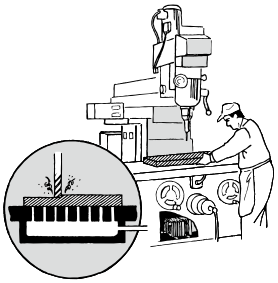

### External Dimensions (Unit: mm)

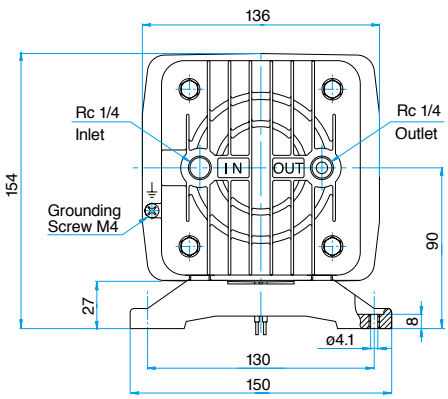


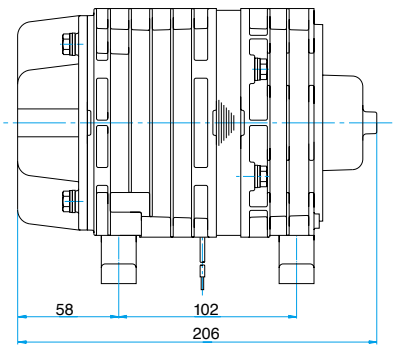

# Vacuum Pump

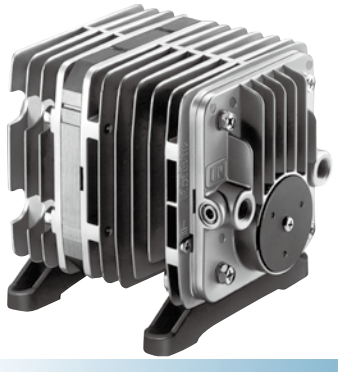

## Model VP0940

115 V/230 V | 115 V/230 V | 115 V/230 V

### Airflow & Power Consumption

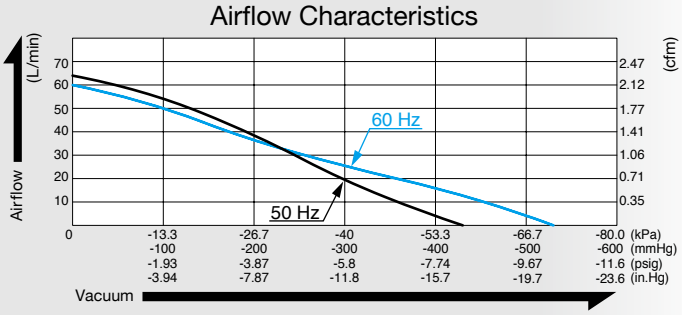


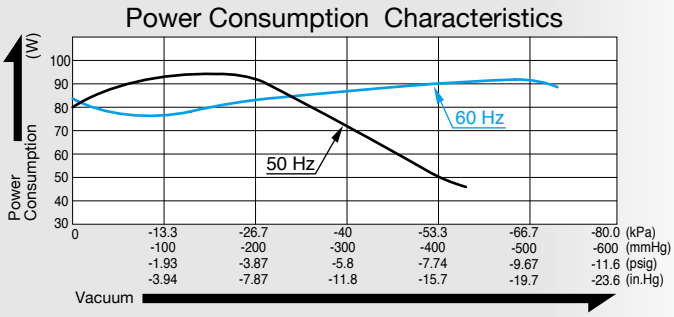


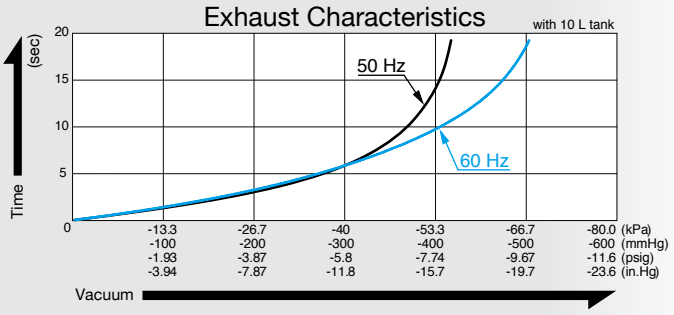


### Specifications

| | | |
|---|---|---|
| Attainable Vacuum *1 | -53.3 kPa (-400 mmHg)<br>-533 mbar<br>-15.7 in. Hg | |
| Free Air Displacement | 60 L/min<br>2.12 cfm | |
| Rated Voltage | 115 V AC | 230 V AC |
| Power Consumption | 95 W | |
| Rated Frequency | 60 Hz | 50 Hz |
| Rated Performance | 10,000 hours | |
| Inlet | ISO Rc 1/4 | |
| Outlet | ISO Rc 1/4 | |
| Duty Cycle | Continuous | |
| Coil Insulation Class | Class B for UL | Class B equivalent |
| Mounting Dimensions | 102 (L) x 130 (W) mm<br>4 - 1/64" (L) x 5 - 1/8" (W) | |
| Weight | 4.55 kg<br>10.0 Lbs | |
| Leadwire Length | 300 mm<br>11 - 13/16" | 320 mm<br>12 - 19/32" |

*1: Operations at higher than -53.3 kPa need an additional leak valve or relief valve on the inlet piping.

### Application Examples

**Label Sticking Machine**

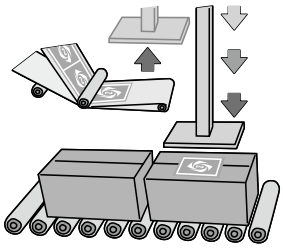

### External Dimensions (Unit: mm)

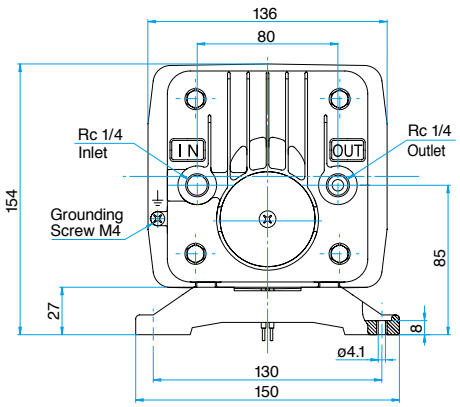


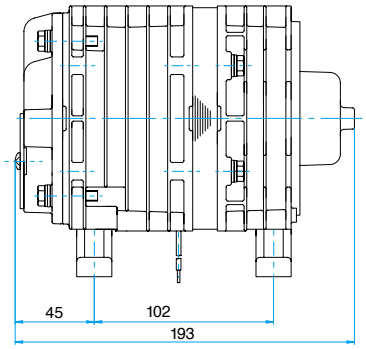

# Vacuum Pump

## Model VP0940T

115 V is made to order

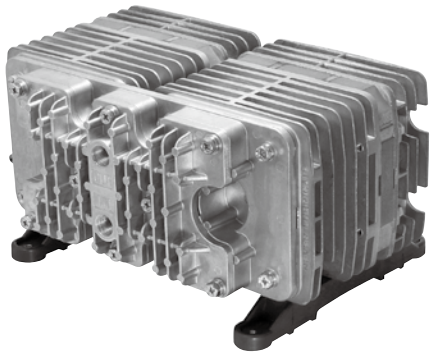

CE 230 V | UKCA 230 V

### Airflow & Power Consumption

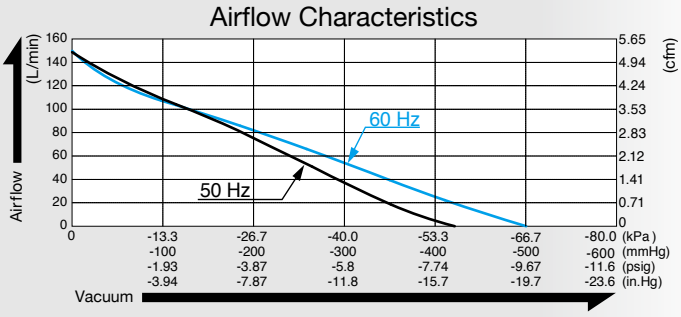


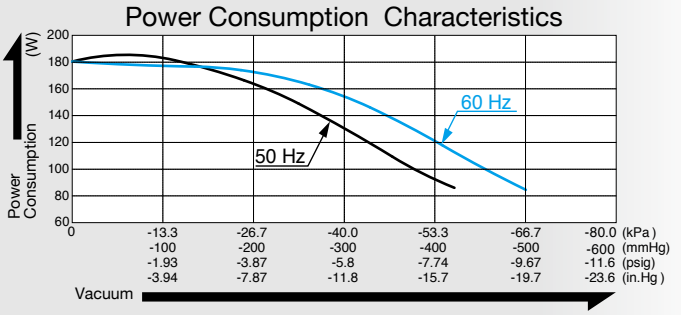


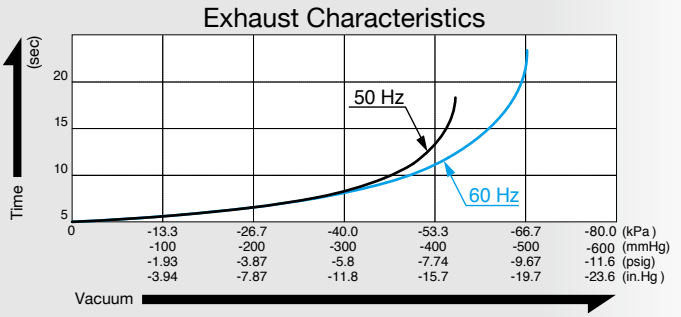


### Specifications

| | | |
|---|---|---|
| Attainable Vacuum *1 | -53.3 kPa (-400 mmHg)<br>-533 mbar<br>-15.7 in. Hg | |
| Free Air Displacement | 120 L/min<br>4.24 cfm | |
| Rated Voltage | 115 V AC | 230 V AC |
| Power Consumption | 185 W | |
| Rated Frequency | 60 Hz | 50 Hz |
| Rated Performance | 10,000 hours | |
| Inlet | ISO Rc 3/8 | |
| Outlet | ISO Rc 3/8 | |
| Duty Cycle | Continuous | |
| Coil Insulation Class | Class B equivalent | |
| Mounting Dimensions | 172 (L) x 211 (W) mm<br>6 - 49/64" (L) x 8 - 5/16" (W) | |
| Weight | 10 kg<br>22 Lbs | |
| Leadwire Length | 300 mm<br>11 - 13/16" | 320 mm<br>12 - 19/32" |

*1: Operations at higher than -53.3 kPa need an additional leak valve or relief valve on the inlet piping.

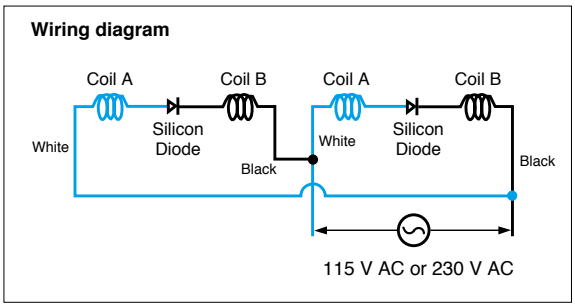


*The silencer, air filter, and pipe are not included with the product.
*Piping and wiring need to be done by the user.

### External Dimensions (Unit: mm)

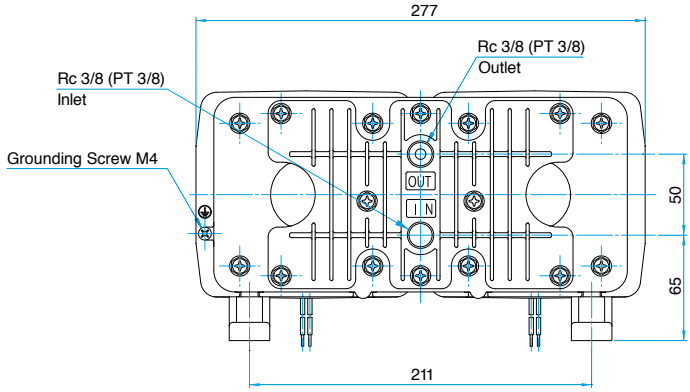


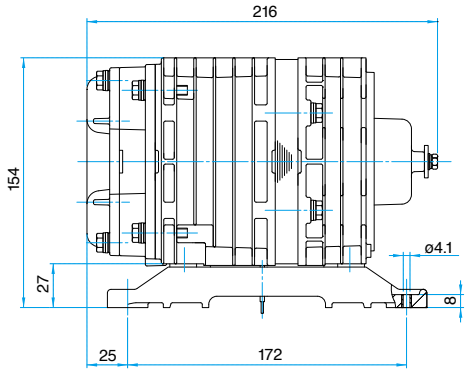

DC LINEAR
Free Piston Compressor

# AIR COMPRESSOR

Page


DAH102-X1 — 39
DAH102-Y1 — 40
DAH105-X1 — 41
DAH105-Y1 — 42
DAH110-X1 — 43
DAH110-Y1 — 44


## DAH series

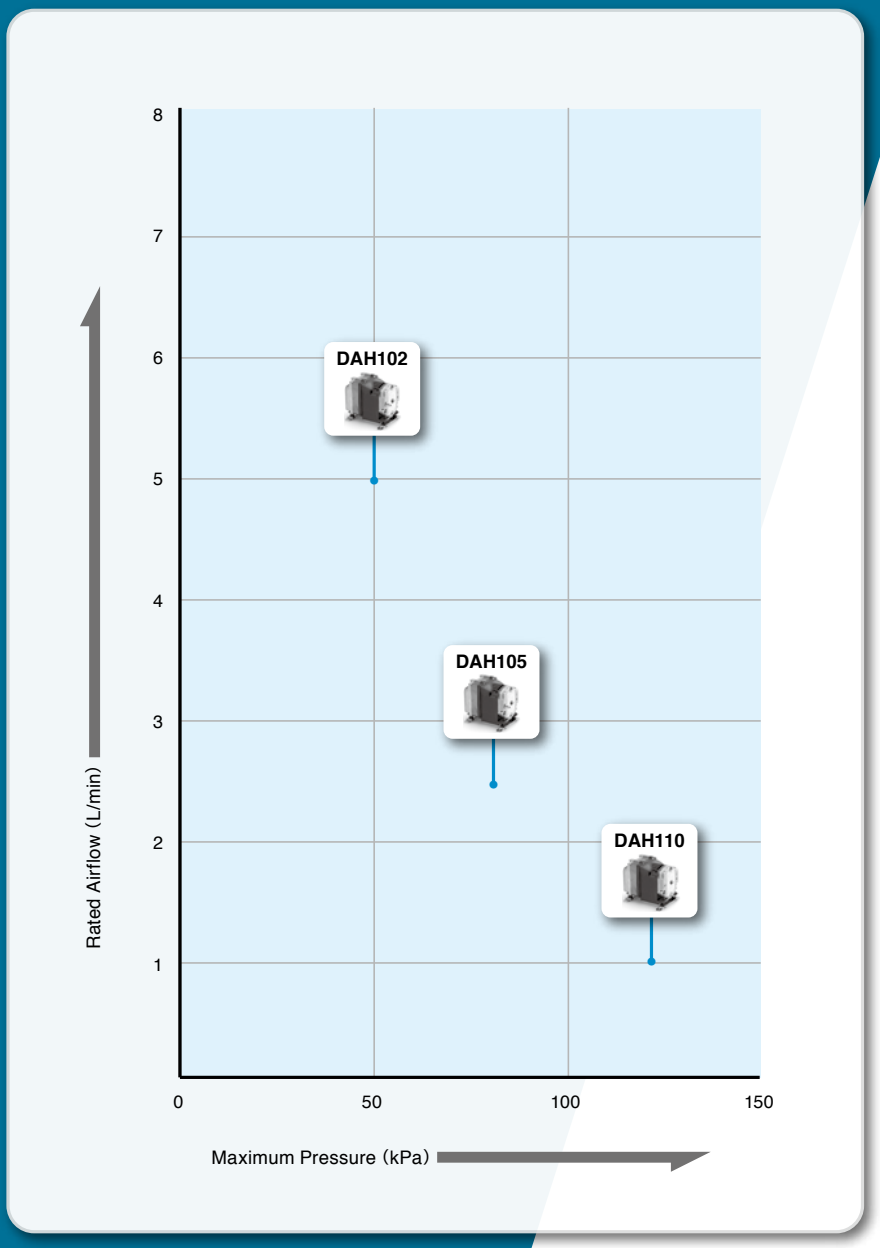

# Compressor

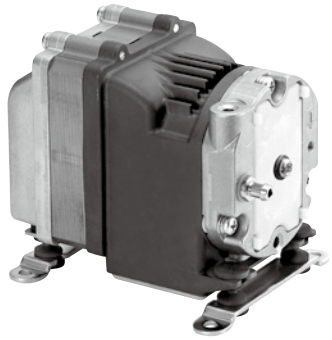

## Model DAH102-X1

12 V DC

CE 12 V | UKCA 12 V

### Airflow & Electric Current

Airflow Characteristics

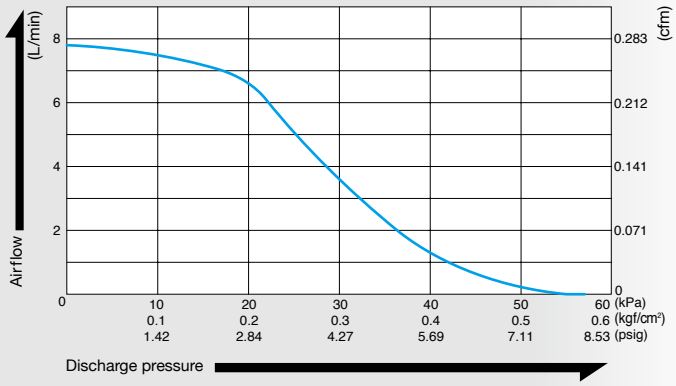


Current Characteristics

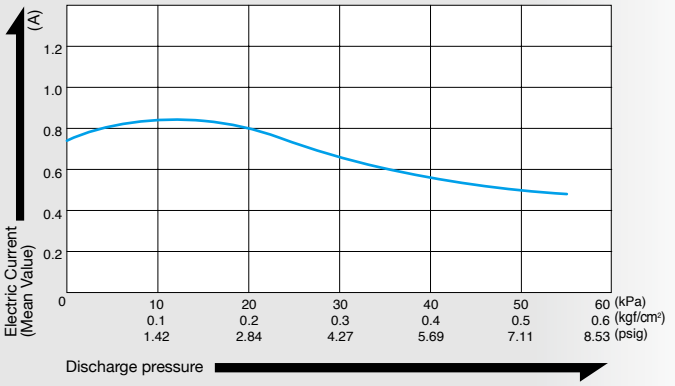


### Specifications

| | |
|---|---|
| Rated Pressure | 20 kPa (0.2 kgf/cm²)<br>0.2 bar<br>2.84 psig |
| Rated Airflow | 5 L/min *1<br>0.177 cfm |
| Maximum Pressure | 50 kPa (0.5 kgf/cm²)<br>0.5 bar<br>7.11 psig |
| Rated Voltage | 12 V DC |
| Current (Mean Value) | 0.81 A |
| Rated Performance (MTTF) | 10,000 hours |
| Outlet | 6 mm O.D. hose barb |
| Duty Cycle | Continuous |
| Coil Insulation Class | Class A equivalent |
| Mounting Dimensions | 76 (L) x 70 (W) mm<br>2 - 63/64" (L) x 2 - 3/4" (W) |
| Weight | 0.91 kg<br>2.01 Lbs |
| Leadwire Length | 300 mm<br>11 - 13/16" |

*1: Airflow at rated pressure.

### Optional Accessory (LB07793)

Heavy duty rubber feet available on request.

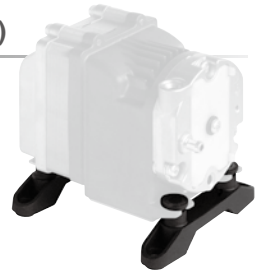

### Application Examples

Medical equipment, analyzers, etc.

### External Dimensions (Unit: mm)

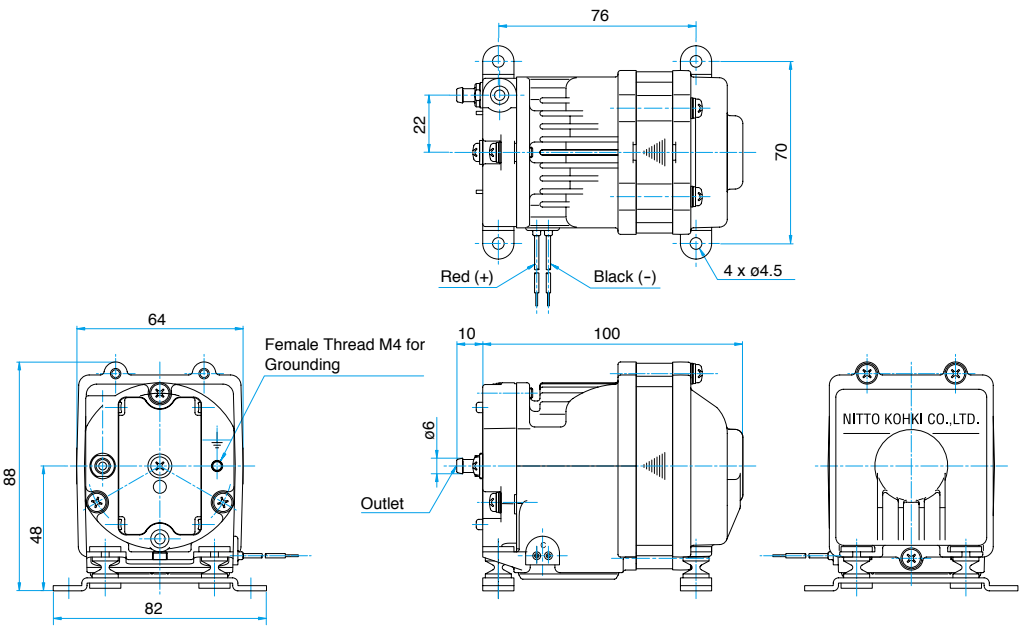

# Compressor

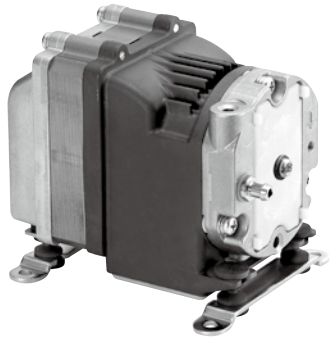

## Model DAH102-Y1

24 V DC

CE 24 V | UK CA 24 V

### Airflow & Electric Current

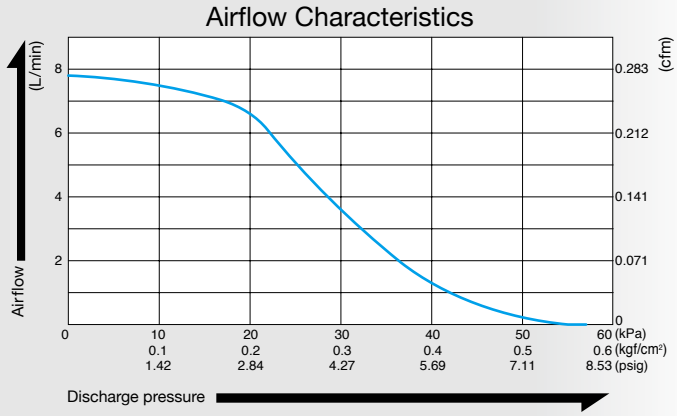


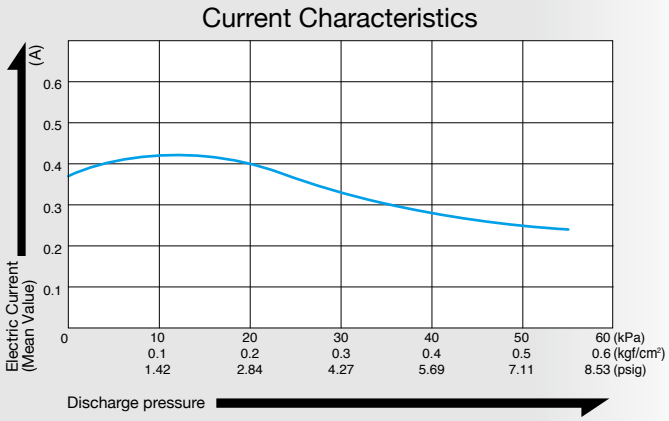


### Specifications

| | |
|---|---|
| Rated Pressure | 20 kPa (0.2 kgf/cm²)<br>0.2 bar<br>2.84 psig |
| Rated Airflow | 5 L/min *1<br>0.177 cfm |
| Maximum Pressure | 50 kPa (0.5 kgf/cm²)<br>0.5 bar<br>7.11 psig |
| Rated Voltage | 24 V DC |
| Current (Mean Value) | 0.40 A |
| Rated Performance (MTTF) | 10,000 hours |
| Outlet | 6 mm O.D. hose barb |
| Duty Cycle | Continuous |
| Coil Insulation Class | Class A equivalent |
| Mounting Dimensions | 76 (L) x 70 (W) mm<br>2 - 63/64" (L) x 2 - 3/4" (W) |
| Weight | 0.91 kg<br>2.01 Lbs |
| Leadwire Length | 300 mm<br>11 - 13/16" |

*1: Airflow at rated pressure.

### Optional Accessory (LB07793)

Heavy duty rubber feet available on request.

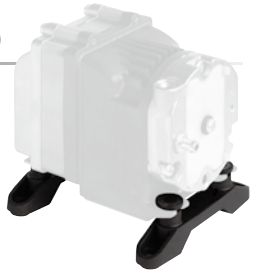

### Application Examples

Medical equipment, analyzers, etc.

### External Dimensions (Unit: mm)

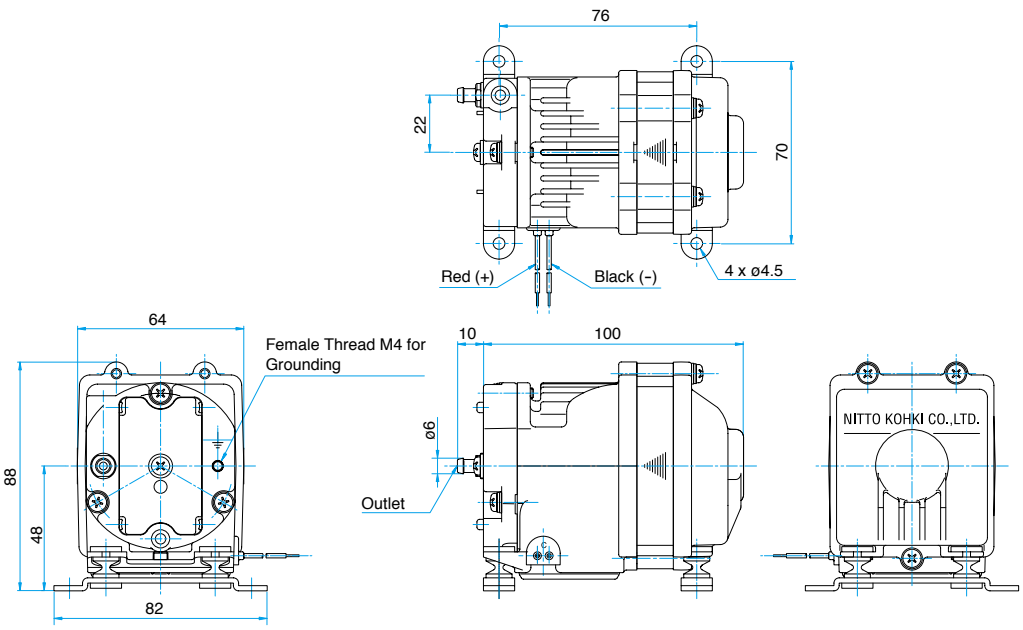

# Compressor

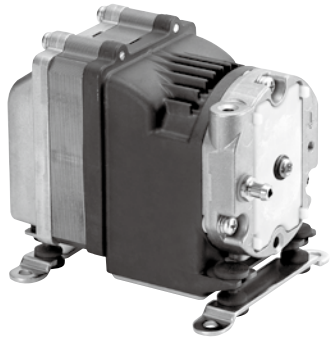

## Model DAH105-X1

12 V DC

CE 12 V | UKCA 12 V

### Airflow & Electric Current

Airflow Characteristics

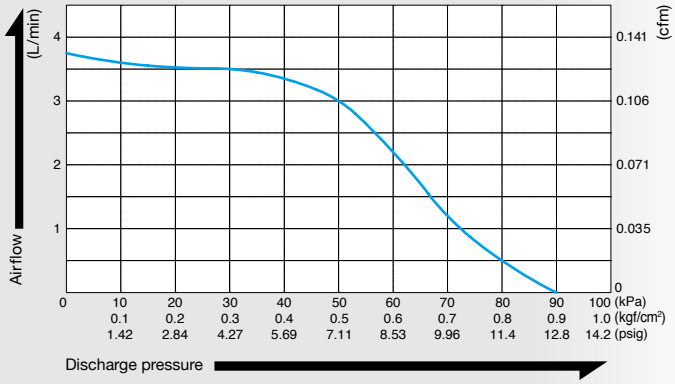


Current Characteristics

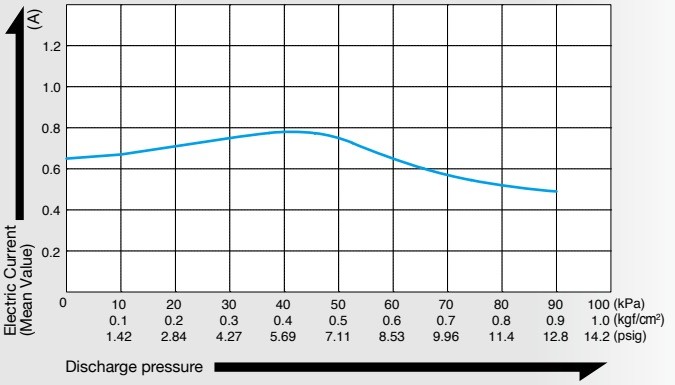


### Specifications

| | |
|---|---|
| Rated Pressure | 50 kPa (0.5 kgf/cm²)<br>0.5 bar<br>7.11 psig |
| Rated Airflow | 2.5 L/min *1<br>0.088 cfm |
| Maximum Pressure | 80 kPa (0.8 kgf/cm²)<br>0.8 bar<br>11.4 psig |
| Rated Voltage | 12 V DC |
| Current (Mean Value) | 0.74 A |
| Rated Performance (MTTF) | 10,000 hours |
| Outlet | 6 mm O.D. hose barb |
| Duty Cycle | Continuous |
| Coil Insulation Class | Class A equivalent |
| Mounting Dimensions | 76 (L) x 70 (W) mm<br>2 - 63/64" (L) x 2 - 3/4" (W) |
| Weight | 0.91 kg<br>2.01 Lbs |
| Leadwire Length | 300 mm<br>11 - 13/16" |

*1: Airflow at rated pressure.

### Optional Accessory (LB07793)

Heavy duty rubber feet available on request.

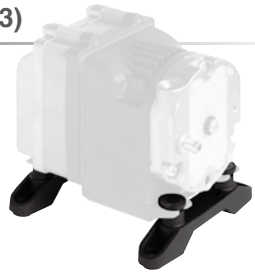

### Application Examples

Medical equipment, analyzers, etc.

### External Dimensions (Unit: mm)

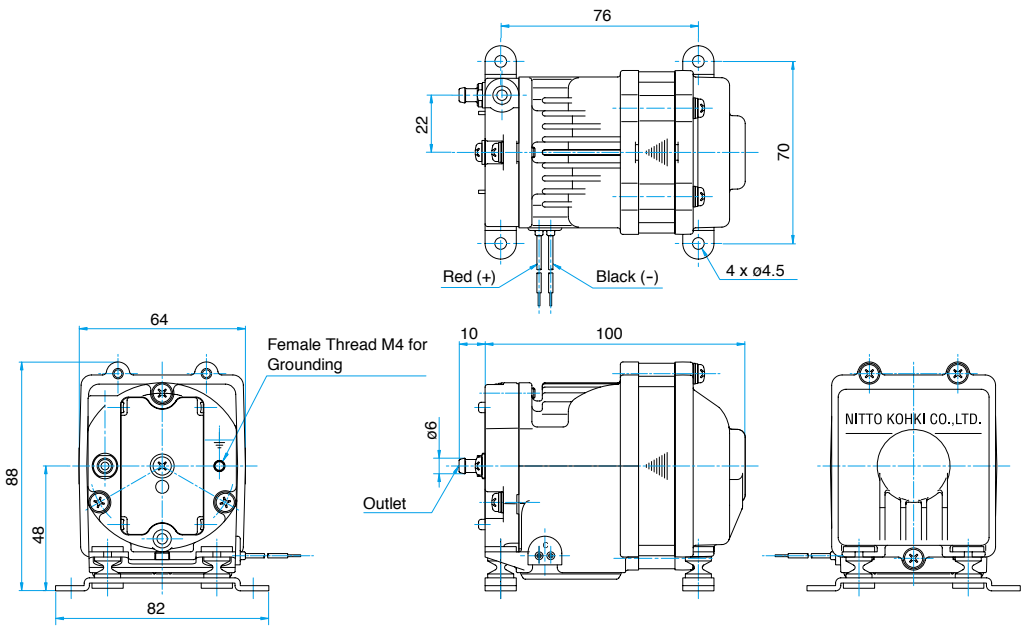

# Compressor

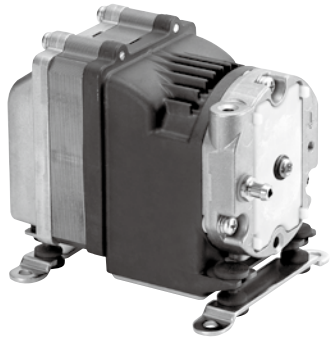

## Model DAH105-Y1

24 V DC

CE 24 V | UK CA 24 V

### Airflow & Electric Current

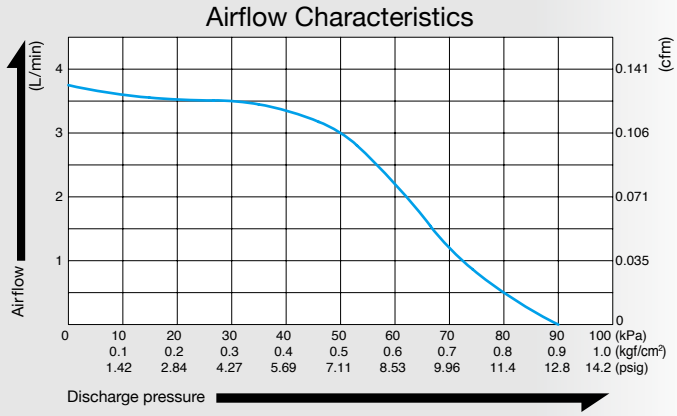


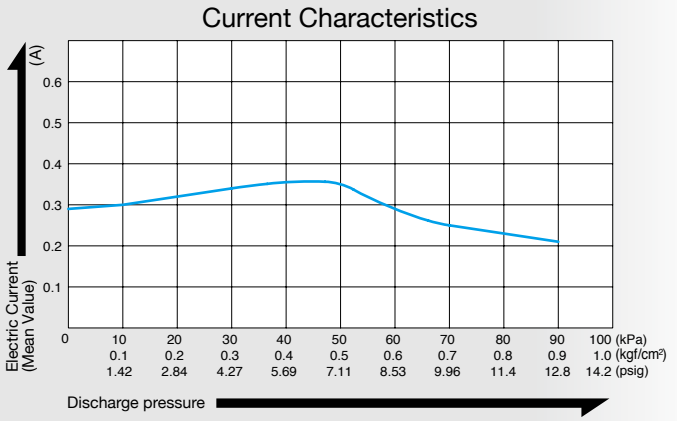


### Specifications

| | |
|---|---|
| Rated Pressure | 50 kPa (0.5 kgf/cm²)<br>0.5 bar<br>7.11 psig |
| Rated Airflow | 2.5 L/min *1<br>0.088 cfm |
| Maximum Pressure | 80 kPa (0.8 kgf/cm²)<br>0.8 bar<br>11.4 psig |
| Rated Voltage | 24 V DC |
| Current (Mean Value) | 0.35 A |
| Rated Performance (MTTF) | 10,000 hours |
| Outlet | 6 mm O.D. hose barb |
| Duty Cycle | Continuous |
| Coil Insulation Class | Class A equivalent |
| Mounting Dimensions | 76 (L) x 70 (W) mm<br>2 - 63/64" (L) x 2 - 3/4" (W) |
| Weight | 0.91 kg<br>2.01 Lbs |
| Leadwire Length | 300 mm<br>11 - 13/16" |

*1: Airflow at rated pressure.

### Optional Accessory (LB07793)

Heavy duty rubber feet available on request.

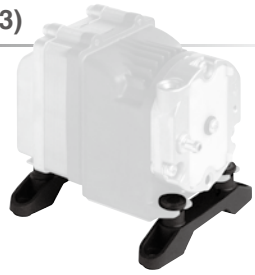

### Application Examples

Medical equipment, analyzers, etc.

### External Dimensions (Unit: mm)

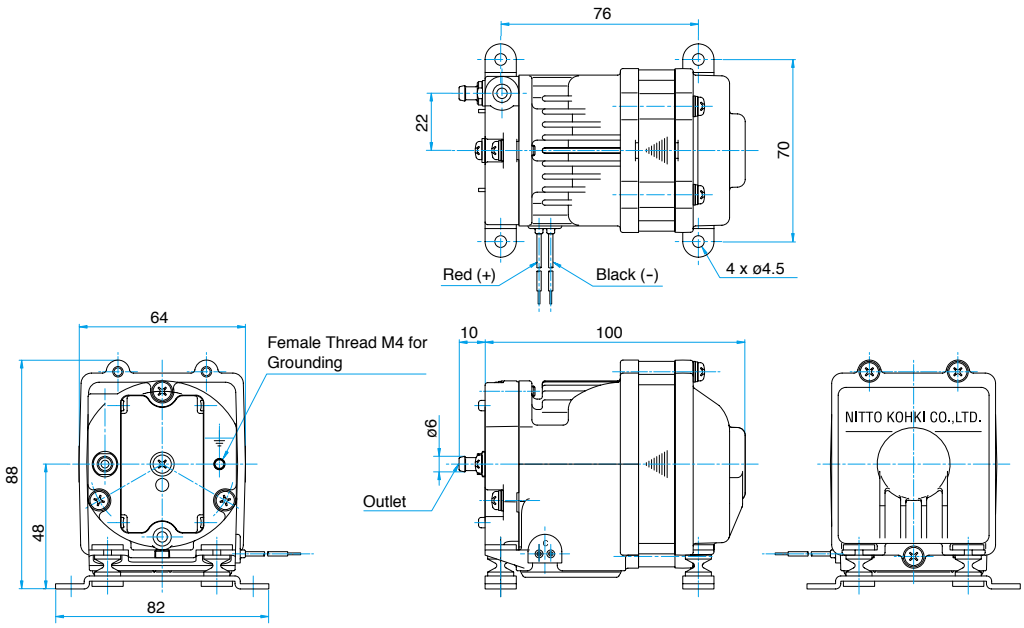

# Compressor

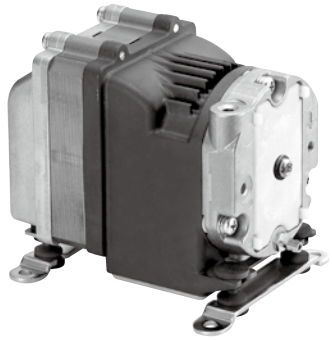

## Model DAH110-X1

12 V DC

CE 12 V | UKCA 12 V

### Airflow & Electric Current

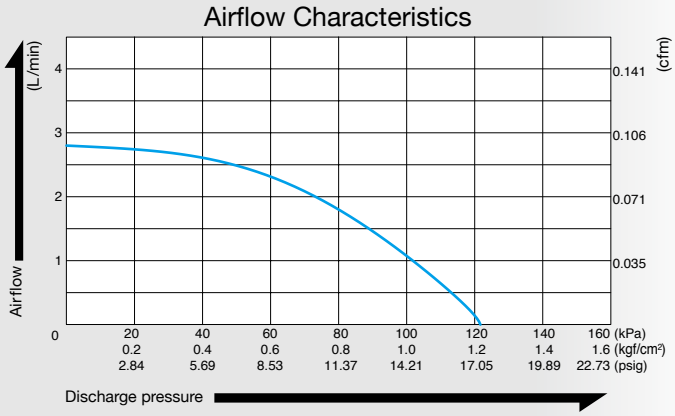


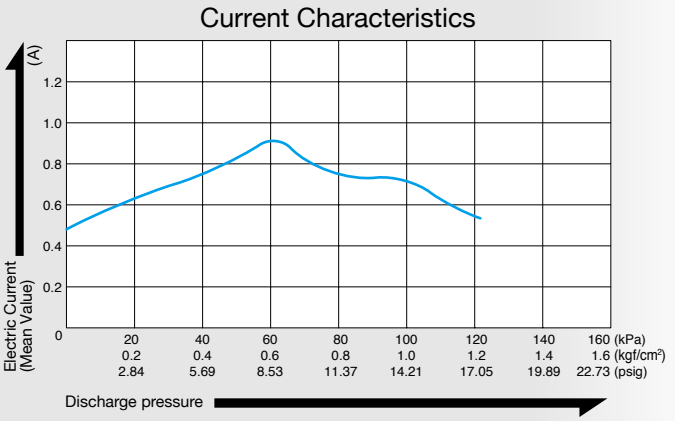


### Specifications

| | |
|---|---|
| Rated Pressure | 100 kPa (1.0 kgf/cm²)<br>1.0 bar<br>14.2 psig |
| Rated Airflow | 1.0 L/min *1<br>0.035 cfm |
| Maximum Pressure | 120 kPa (1.2 kgf/cm²)<br>1.2 bar<br>17.1 psig |
| Rated Voltage | 12 V DC |
| Current (Mean Value) | 0.74 A |
| Rated Performance (MTTF) | 5,000 hours |
| Outlet | 4.7 mm O.D. hose barb |
| Duty Cycle | Continuous |
| Coil Insulation Class | Class A equivalent |
| Mounting Dimensions | 76 (L) x 70 (W) mm<br>2 - 63/64" (L) x 2 - 3/4" (W) |
| Weight | 0.91 kg<br>2.01 Lbs |
| Leadwire Length | 300 mm<br>11 - 13/16" |

*1: Airflow at rated pressure.

### Optional Accessory (LB07793)

Heavy duty rubber feet available on request.

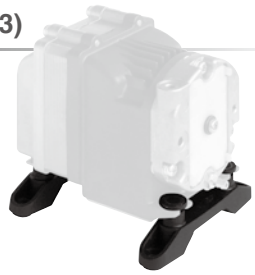

### Application Examples

Medical equipment, analyzers, etc.

### External Dimensions (Unit: mm)

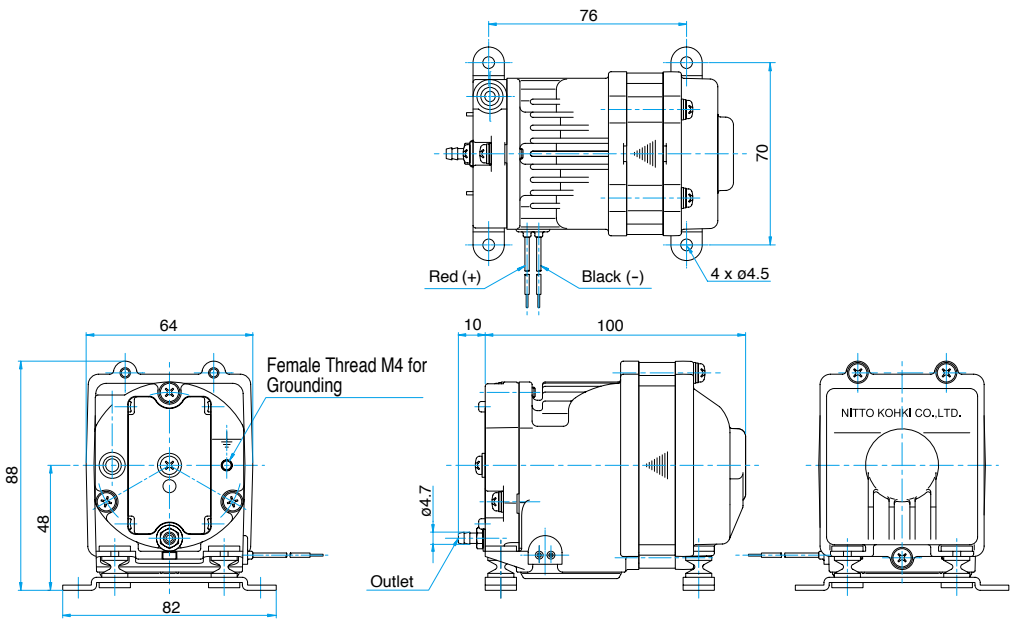

# Compressor

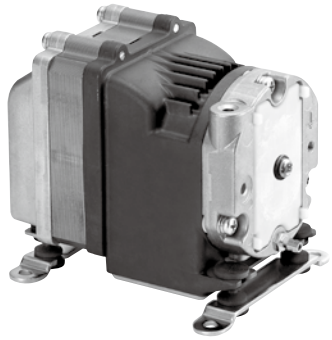

## Model DAH110-Y1

24 V DC

CE 24 V | UKCA 24 V

### Airflow & Electric Current

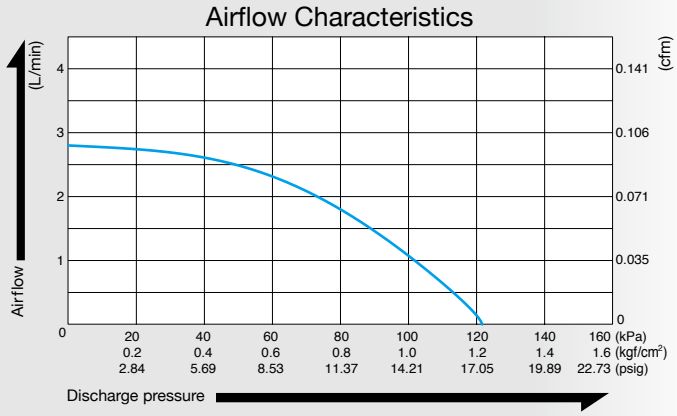


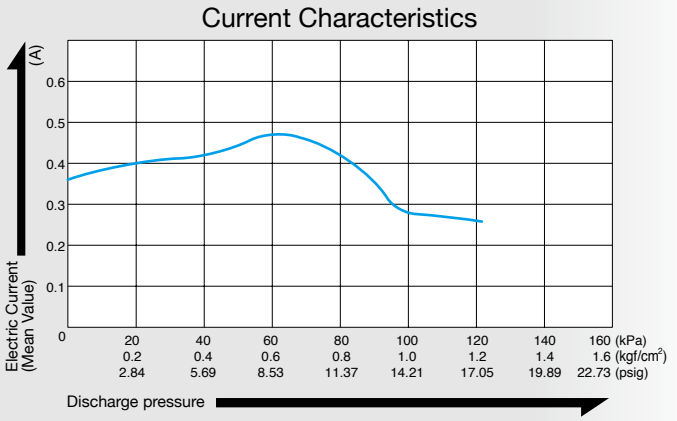


### Specifications

| | |
|---|---|
| Rated Pressure | 100 kPa (1.0 kgf/cm²)<br>1.0 bar<br>14.2 psig |
| Rated Airflow | 1.0 L/min *1<br>0.035 cfm |
| Maximum Pressure | 120 kPa (1.2 kgf/cm²)<br>1.2 bar<br>17.1 psig |
| Rated Voltage | 24 V DC |
| Current (Mean Value) | 0.27 A |
| Rated Performance (MTTF) | 5,000 hours |
| Outlet | 4.7 mm O.D. hose barb |
| Duty Cycle | Continuous |
| Coil Insulation Class | Class A equivalent |
| Mounting Dimensions | 76 (L) x 70 (W) mm<br>2 - 63/64" (L) x 2 - 3/4" (W) |
| Weight | 0.91 kg<br>2.01 Lbs |
| Leadwire Length | 300 mm<br>11 - 13/16" |

*1: Airflow at rated pressure.

### Optional Accessory (LB07793)

Heavy duty rubber feet available on request.

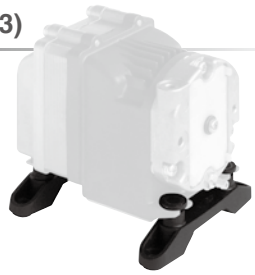

### Application Examples

Medical equipment, analyzers, etc.

### External Dimensions (Unit: mm)

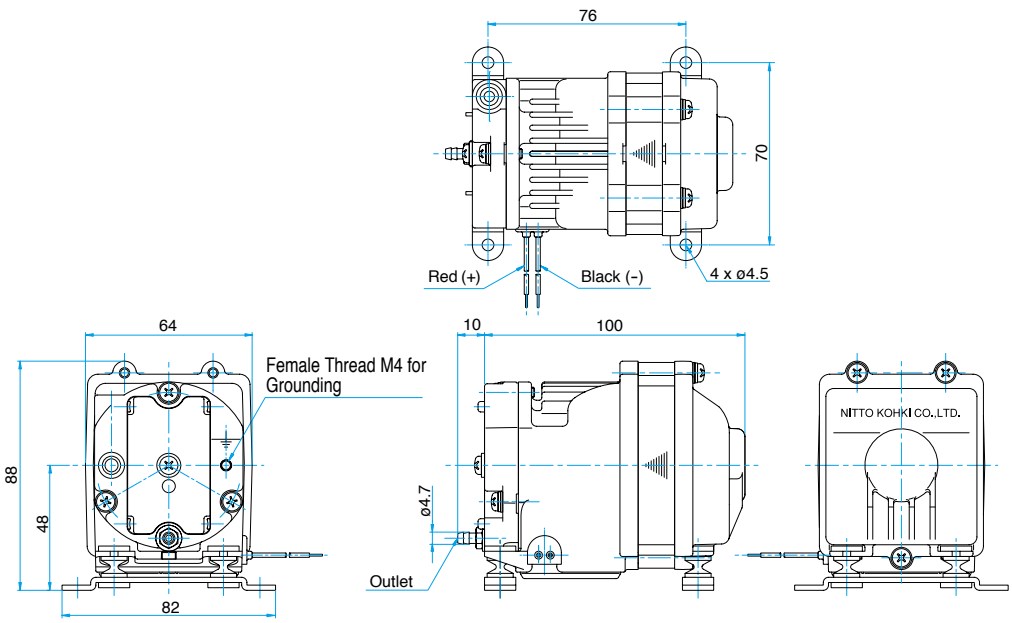

DC LINEAR
Free Piston Vacuum Pump

# VACUUM PUMP

Page


DVH130-X1 — 47
DVH130-Y1 — 48
DVH145-X1 — 49
DVH145-Y1 — 50


## DVH series

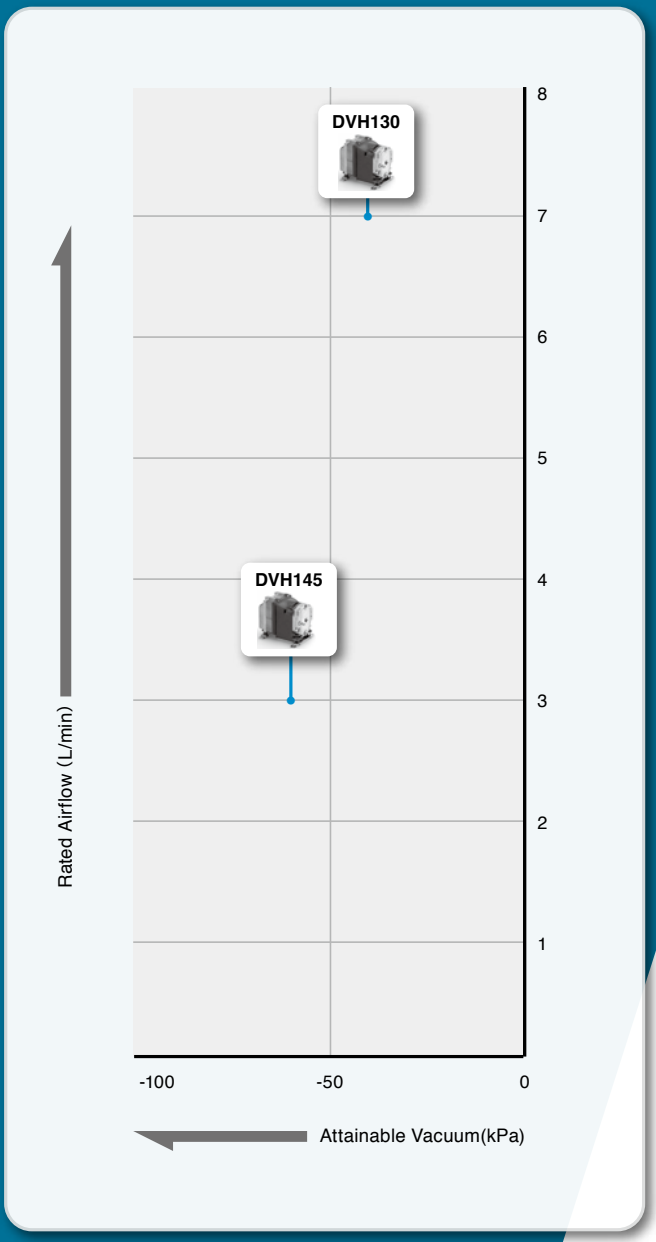

# Vacuum Pump

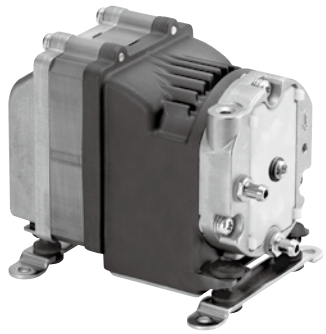

## Model DVH130-X1

12 V DC

CE 12 V | UK CA 12 V

### Airflow & Electric Current

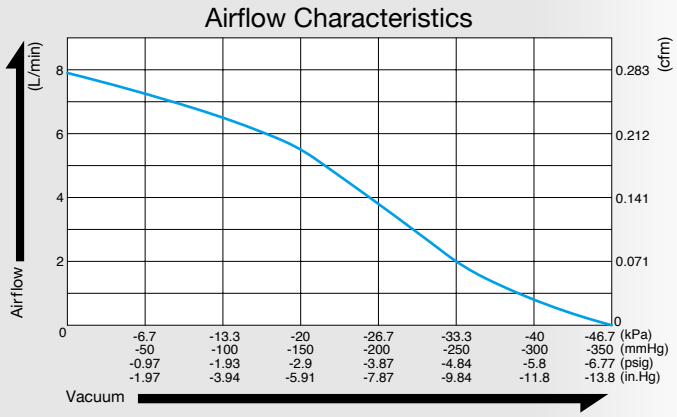


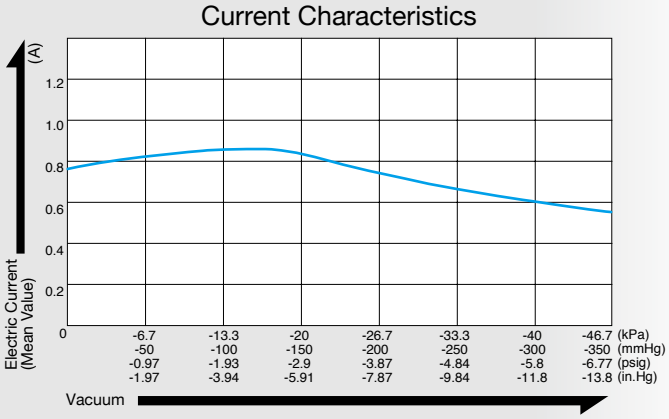


### Specifications

| | |
|---|---|
| Attainable Vacuum | -40 kPa (-300 mmHg)<br>-400 mbar<br>-11.8 in. Hg |
| Free Air Displacement | 7 L/min *1<br>0.247 cfm |
| Rated Voltage | 12 V DC |
| Current (Mean Value) | 0.86 A |
| Rated Performance (MTTF) | 10,000 hours |
| Inlet | 6 mm O.D. hose barb |
| Outlet | 6 mm O.D. hose barb |
| Duty Cycle | Continuous |
| Coil Insulation Class | Class A equivalent |
| Mounting Dimensions | 76 (L) x 70 (W) mm<br>2 - 63/64" (L) x 2 - 3/4" (W) |
| Weight | 0.91 kg<br>2.01 Lbs |
| Leadwire Length | 300 mm<br>11 - 13/16" |

*1: Free air displacement at no-load operation.

### Optional Accessory (LB07793)

Heavy duty rubber feet available on request.

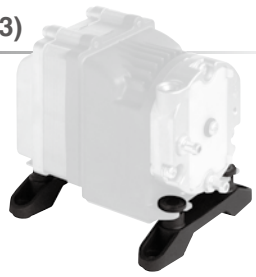

### Application Examples

Medical equipment, analyzers, etc.

### External Dimensions (Unit: mm)

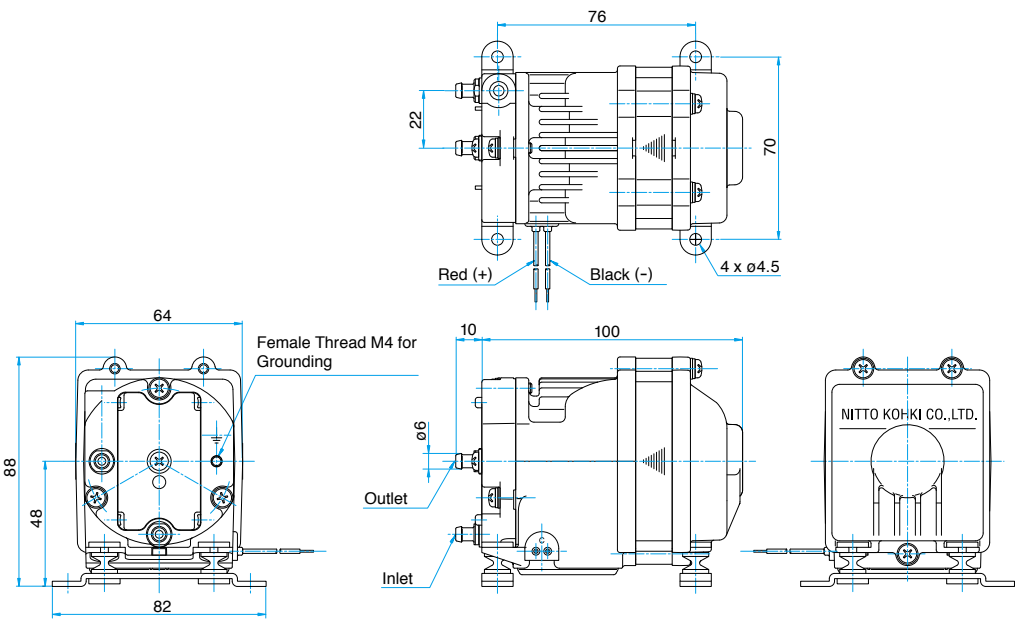

# Vacuum Pump

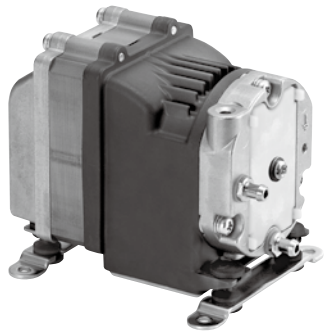

## Model DVH130-Y1

24 V DC

CE 24 V | UK CA 24 V

### Airflow & Electric Current

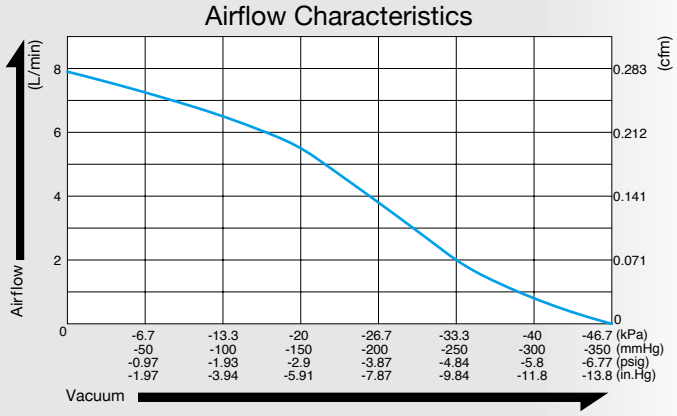


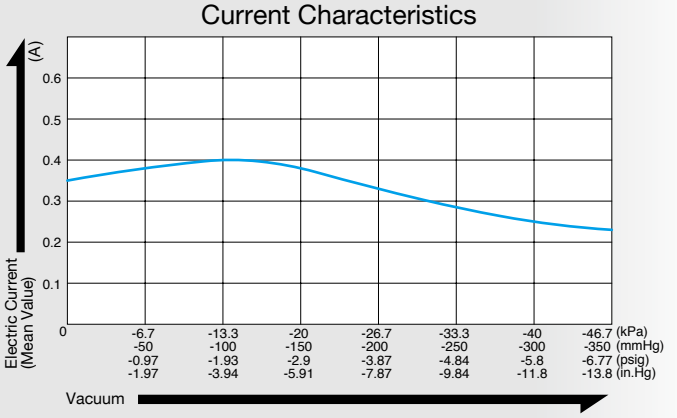


### Specifications

| | |
|---|---|
| Attainable Vacuum | -40 kPa (-300 mmHg)<br>-400 mbar<br>-11.8 in. Hg |
| Free Air Displacement | 7 L/min *1<br>0.247 cfm |
| Rated Voltage | 24 V DC |
| Current (Mean Value) | 0.41 A |
| Rated Performance (MTTF) | 10,000 hours |
| Inlet | 6 mm O.D. hose barb |
| Outlet | 6 mm O.D. hose barb |
| Duty Cycle | Continuous |
| Coil Insulation Class | Class A equivalent |
| Mounting Dimensions | 76 (L) x 70 (W) mm<br>2 - 63/64" (L) x 2 - 3/4" (W) |
| Weight | 0.91 kg<br>2.01 Lbs |
| Leadwire Length | 300 mm<br>11 - 13/16" |

*1: Free air displacement at no-load operation.

### Optional Accessory (LB07793)

Heavy duty rubber feet available on request.

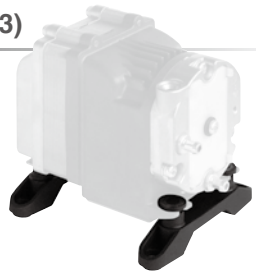

### Application Examples

Medical equipment, analyzers, etc.

### External Dimensions (Unit: mm)

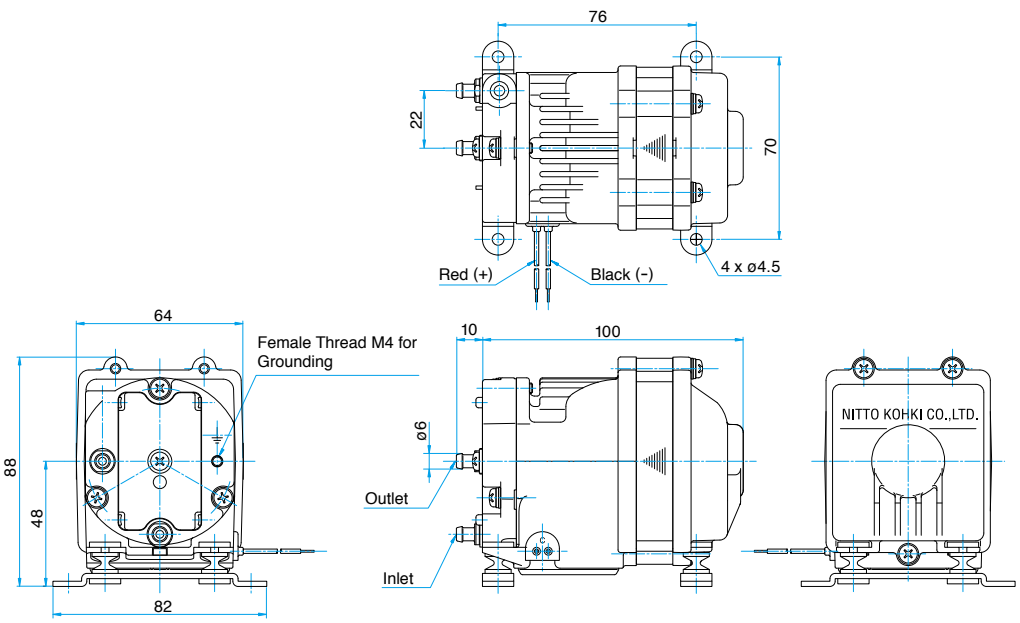

# Vacuum Pump

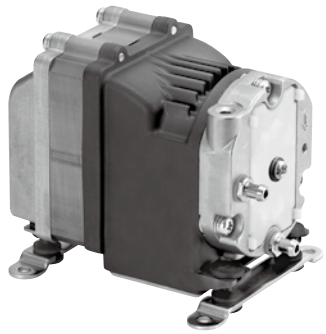

## Model DVH145-X1

12 V DC

CE 12 V | UKCA 12 V

### Airflow & Electric Current

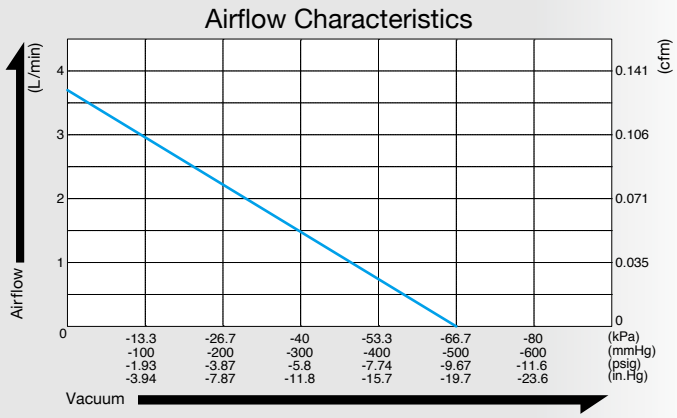


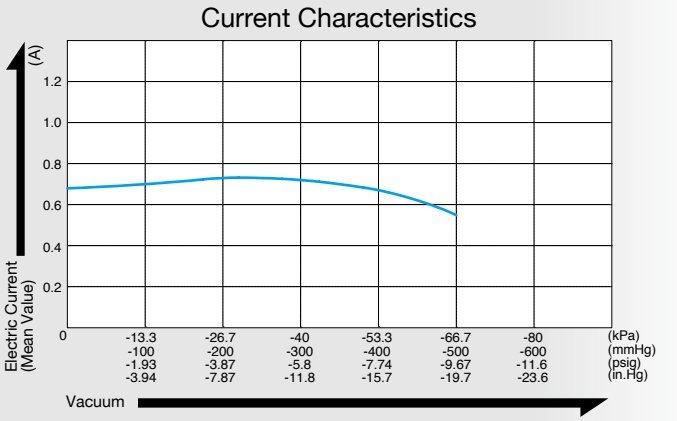


### Specifications

| | |
|---|---|
| Attainable Vacuum | -60 kPa (-450 mmHg)<br>-600 mbar<br>-17.7 in. Hg |
| Free Air Displacement | 3 L/min *1<br>0.106 cfm |
| Rated Voltage | 12 V DC |
| Current (Mean Value) | 0.73 A |
| Rated Performance (MTTF) | 10,000 hours |
| Inlet | 6 mm O.D. hose barb |
| Outlet | 6 mm O.D. hose barb |
| Duty Cycle | Continuous |
| Coil Insulation Class | Class A equivalent |
| Mounting Dimensions | 76 (L) x 70 (W) mm<br>2 - 63/64" (L) x 2 - 3/4" (W) |
| Weight | 0.91 kg<br>2.01 Lbs |
| Leadwire Length | 300 mm<br>11 - 13/16" |

*1: Free air displacement at no-load operation.

### Optional Accessory (LB07793)

Heavy duty rubber feet available on request.

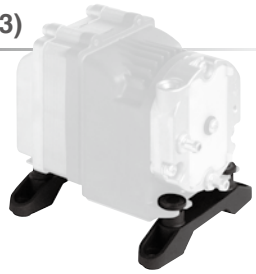

### Application Examples

Medical equipment, analyzers, etc.

### External Dimensions (Unit: mm)

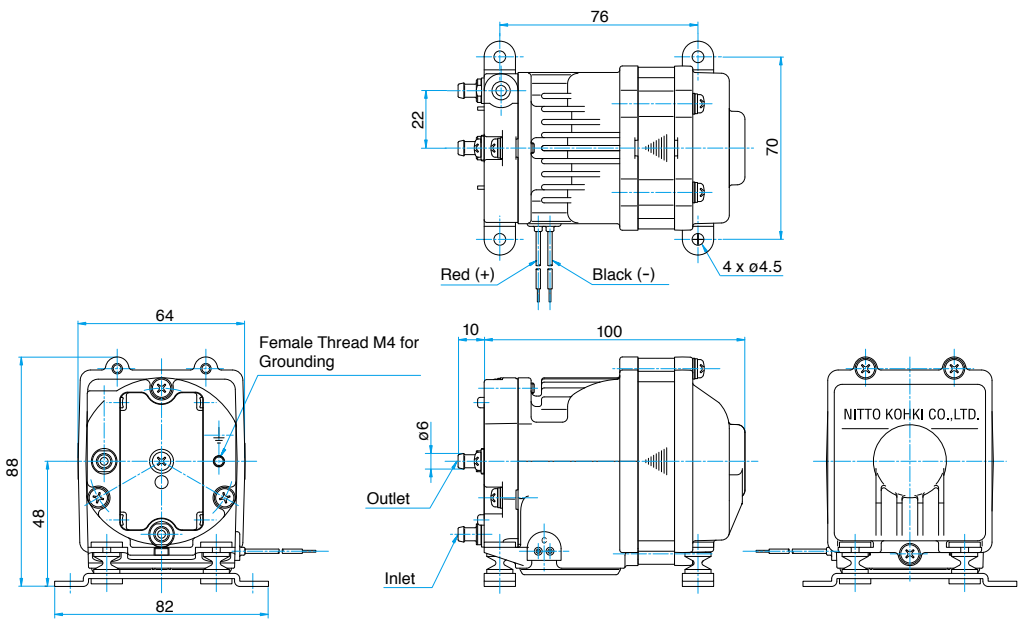

# Vacuum Pump

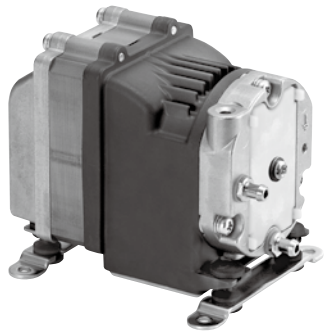

## Model DVH145-Y1

24 V DC

CE 24 V | UKCA 24 V

### Airflow & Electric Current

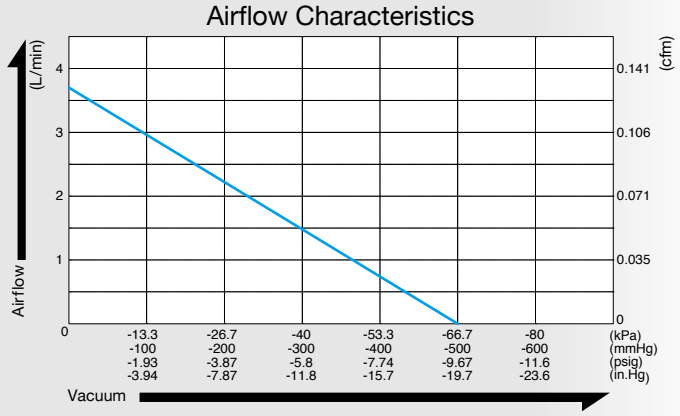


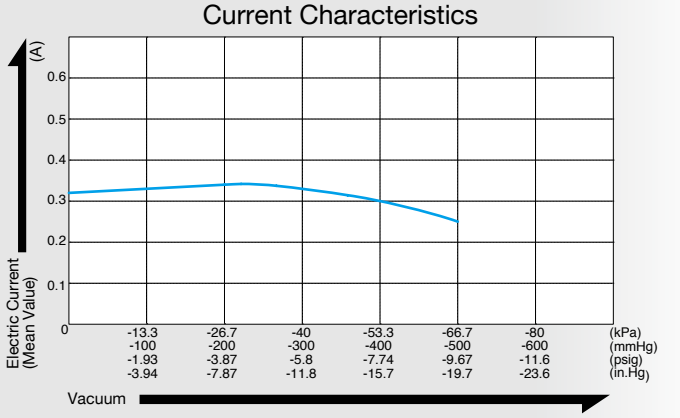


### Specifications

| | |
|---|---|
| Attainable Vacuum | -60 kPa (-450 mmHg)<br>-600 mbar<br>-17.7 in. Hg |
| Free Air Displacement | 3 L/min *1<br>0.106 cfm |
| Rated Voltage | 24 V DC |
| Current (Mean Value) | 0.34 A |
| Rated Performance (MTTF) | 10,000 hours |
| Inlet | 6 mm O.D. hose barb |
| Outlet | 6 mm O.D. hose barb |
| Duty Cycle | Continuous |
| Coil Insulation Class | Class A equivalent |
| Mounting Dimensions | 76 (L) x 70 (W) mm<br>2 - 63/64" (L) x 2 - 3/4" (W) |
| Weight | 0.91 kg<br>2.01 Lbs |
| Leadwire Length | 300 mm<br>11 - 13/16" |

*1: Free air displacement at no-load operation.

### Optional Accessory (LB07793)

Heavy duty rubber feet available on request.

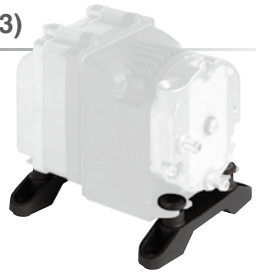

### Application Examples

Medical equipment, analyzers, etc.

### External Dimensions (Unit: mm)

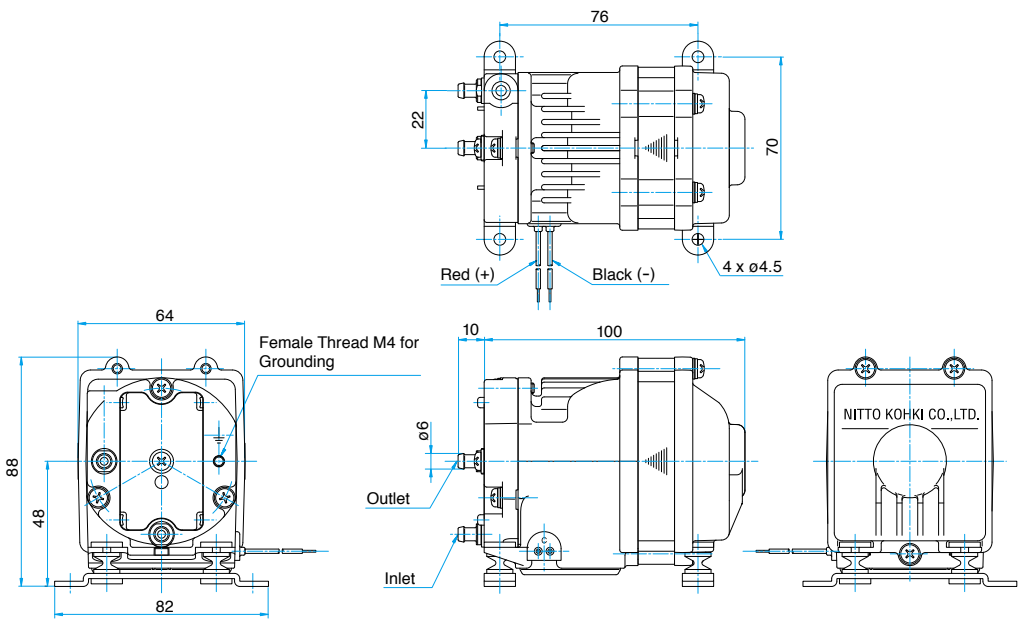

AC LINEAR
Diaphragm Pump

# DIAPHRAGM PUMP

## VC series

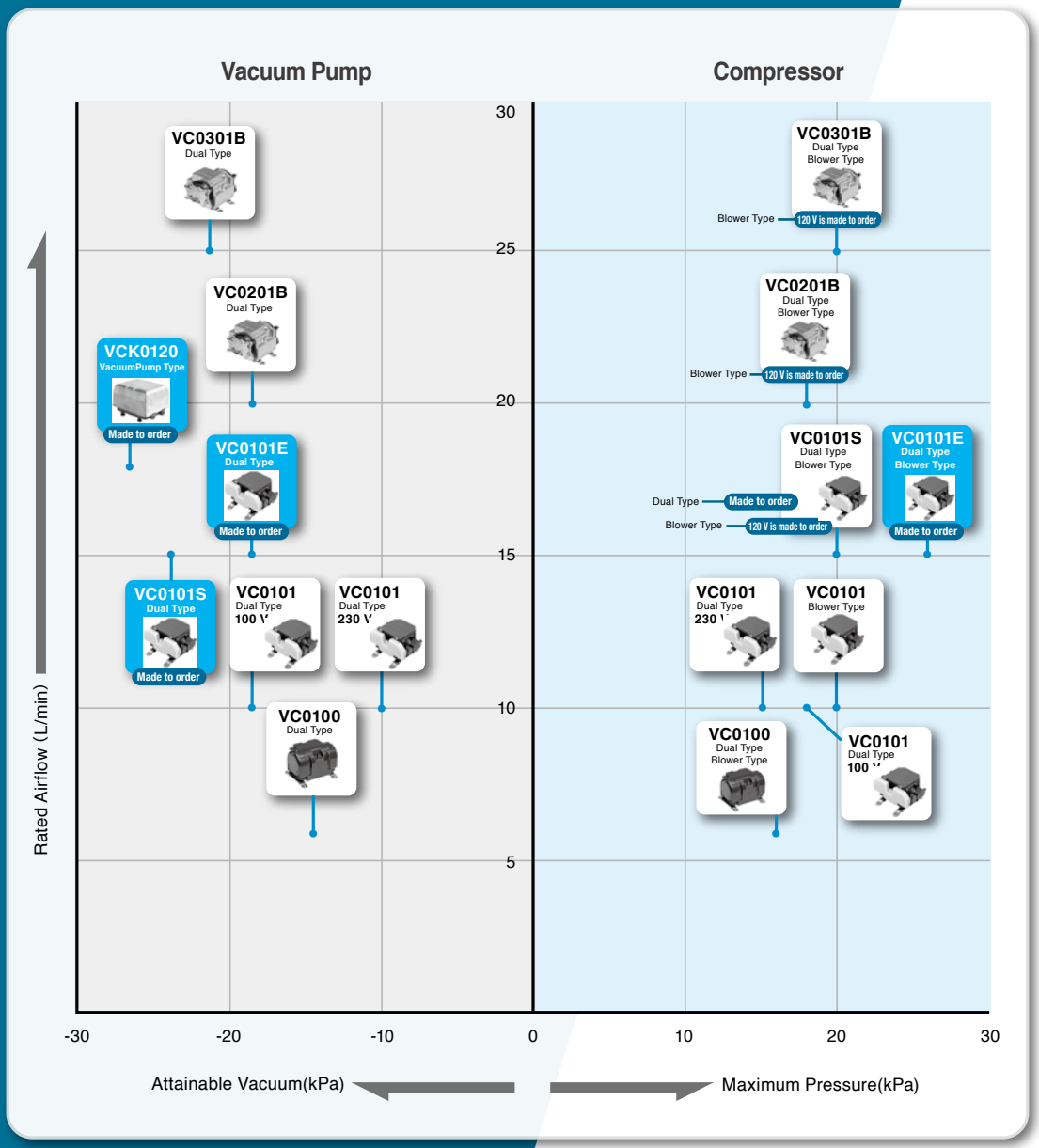


Page


VC0100 Dual Type — 53
VC0100 Blower Type — 54
VC0101 Dual Type — 55
VC0101 Blower Type — 56
VC0101S Blower Type — 57
VC0201B Dual Type — 58
VC0201B Blower Type — 59
VC0301B Dual Type — 60
VC0301B Blower Type — 61


### Made to Order


VCK0120 VacuumPump Type — 105
VC0101E Dual Type — 106
VC0101E Blower Type — 107
VC0101S Dual Type — 118

# Compressor and Vacuum Pump

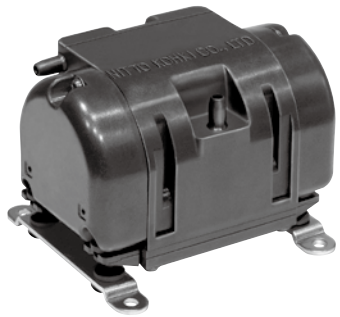

## Model VC0100

**Dual Type**

120 V | 230 V | 230 V

### Airflow & Power Consumption

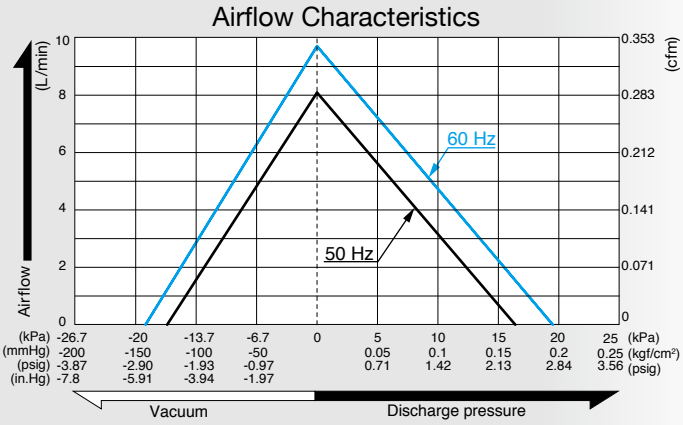


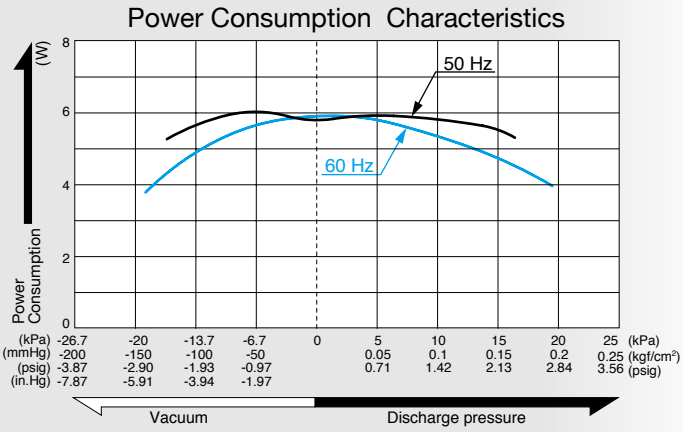


### Specifications

| | | |
|---|---|---|
| Rated Pressure | 4 kPa (0.04 kgf/cm²)<br>0.04 bar<br>0.57 psig | |
| Rated Airflow | 6 L/min<br>0.212 cfm | |
| Maximum Pressure | 16 kPa (0.16 kgf/cm²)<br>0.16 bar<br>2.28 psig | |
| Attainable Vacuum | -14.7 kPa (-110 mmHg)<br>-147 mbar<br>-4.33 in.Hg | |
| Rated Voltage | 120 V AC | 230 V AC |
| Power Consumption | 6 W | |
| Rated Frequency | 60 Hz | 50 Hz |
| Rated Performance | 5,000 hours | |
| Working Pressure Range | -14.7 kPa to 16 kPa<br>(-110 mmHg to 0.16 kgf/cm²)<br>-147 mbar to 0.16 bar<br>-4.33 in.Hg to 2.28 psig | |
| Inlet | 6 mm O.D. hose barb | |
| Outlet | 6 mm O.D. hose barb | |
| Duty Cycle | Continuous | |
| Coil Insulation Class | Class A equivalent | Class E equivalent |
| Mounting Dimensions | 70 (L) x 72 (W) mm<br>2 - 3/4" (L) x 2 - 53/64" (W) | |
| Weight | 0.45 kg<br>0.99 Lbs | |
| Leadwire Length | 300 mm<br>11 - 13/16" | |

### Application Examples

**Massage Devices**

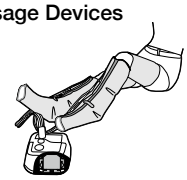

**Bedsore Prevention Mattress**

### External Dimensions (Unit: mm)

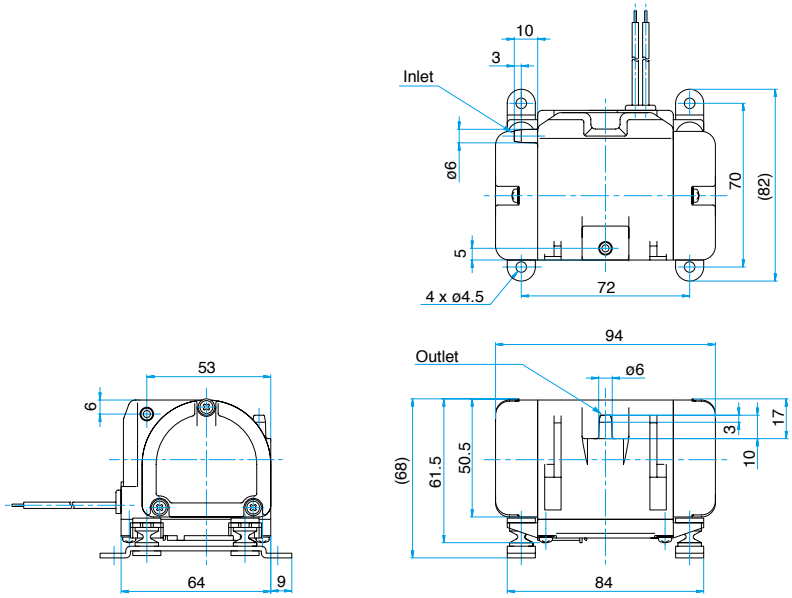

# Compressor

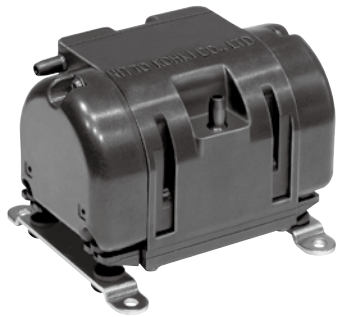

## Model VC0100

**Blower Type**

120 V | 230 V | 230 V

### Airflow & Power Consumption

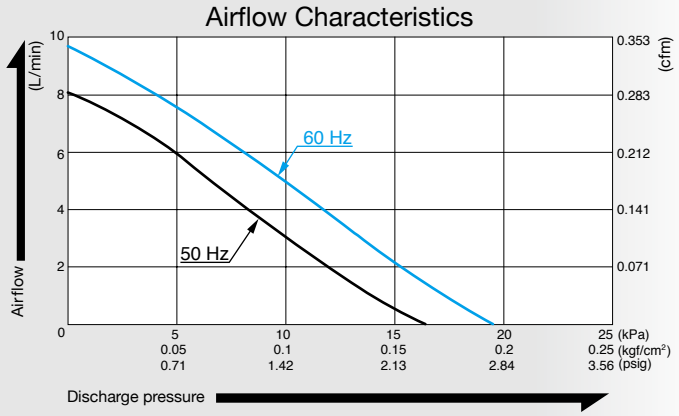


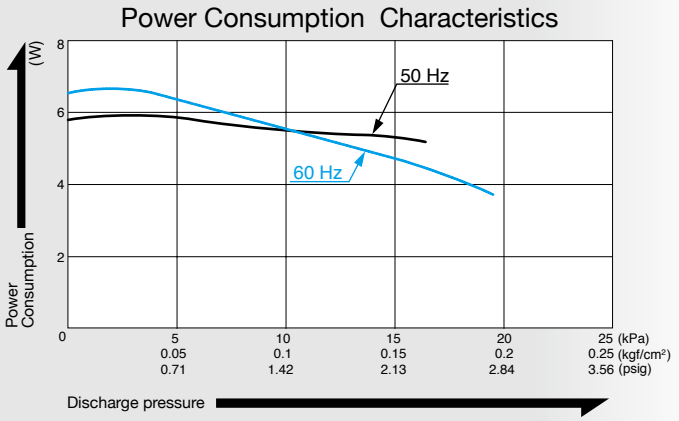


### Specifications

| | | |
|---|---|---|
| Rated Pressure | 4 kPa (0.04 kgf/cm²)<br>0.04 bar<br>0.57 psig | |
| Rated Airflow | 6 L/min<br>0.212 cfm | |
| Maximum Pressure | 16 kPa (0.16 kgf/cm²)<br>0.16 bar<br>2.28 psig | |
| Rated Voltage | 120 V AC | 230 V AC |
| Power Consumption | 6 W | |
| Rated Frequency | 60 Hz | 50 Hz |
| Rated Performance | 10,000 hours | |
| Working Pressure Range | 0 to 16 kPa<br>(0 to 0.16 kgf/cm²)<br>0 to 0.16 bar<br>0 to 2.28 psig | |
| Outlet | 6 mm O.D. hose barb | |
| Duty Cycle | Continuous | |
| Coil Insulation Class | Class A equivalent | Class E equivalent |
| Mounting Dimensions | 70 (L) x 72 (W) mm<br>2 - 3/4" (L) x 2 - 53/64" (W) | |
| Weight | 0.45 kg<br>0.99 Lbs | |
| Leadwire Length | 300 mm<br>11 - 13/16" | |

### Application Examples

**Massage Devices**

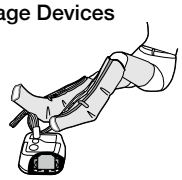

**Bedsore Prevention Mattress**

### External Dimensions (Unit: mm)

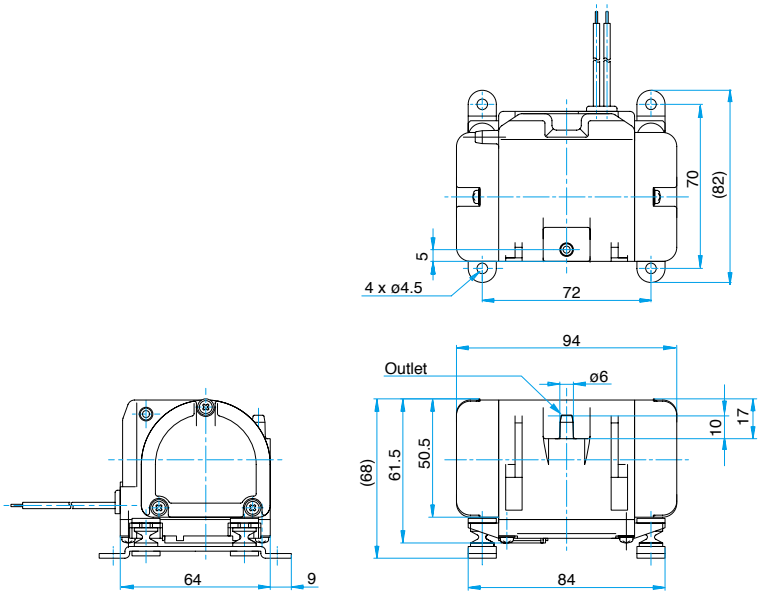

# Compressor and Vacuum Pump

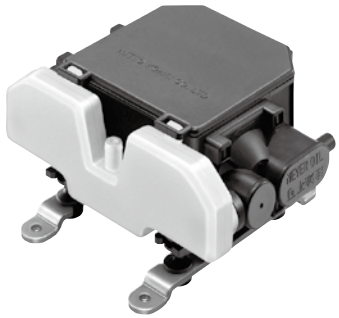

## Model VC0101

**Dual Type**

120 V | 230 V | 230 V

### Airflow & Power Consumption

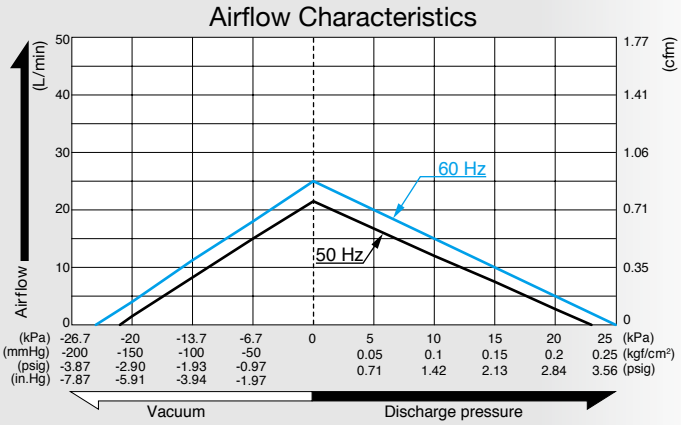


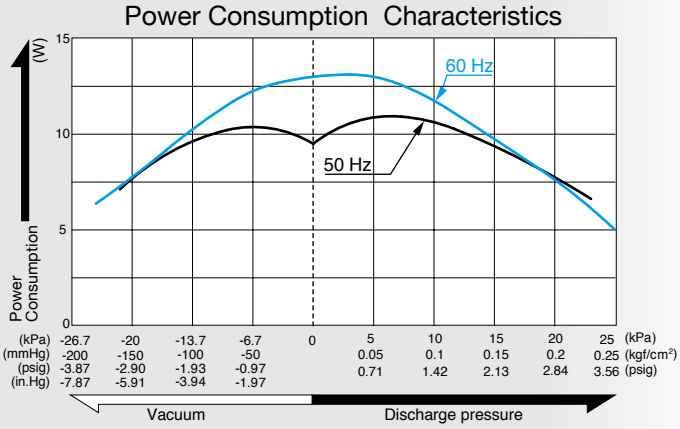


### Specifications

| | | |
|---|---|---|
| Rated Pressure | 10 kPa (0.1 kgf/cm²)<br>0.1 bar<br>1.42 psig | |
| Rated Airflow | 10 L/min<br>0.35 cfm | |
| Rated Voltage | 120 V AC | 230 V AC |
| Maximum Pressure | 18 kPa (0.18 kgf/cm²)<br>0.18 bar<br>2.56 psig | 15 kPa (0.15 kgf/cm²)<br>0.15 bar<br>2.13 psig |
| Attainable Vacuum | -18.7 kPa (-140 mmHg)<br>-187 mbar<br>-5.51 in.Hg | -10 kPa (-76 mmHg)<br>-100 mbar<br>-2.95 in.Hg |
| Working Pressure Range | -18.7 kPa to 18 kPa<br>(-140 mmHg to 0.18 kgf/cm²)<br>-187 mbar to 0.18 bar<br>-5.51 in.Hg to 2.56 psig | -10 kPa to 15 kPa<br>(-76 mmHg to 0.15 kgf/cm²)<br>-100 mbar to 0.15 bar<br>-2.95 in.Hg to 2.13 psig |
| Power Consumption | 11 W | |
| Rated Frequency | 60 Hz | 50 Hz |
| Rated Performance | 5,000 hours | |
| Inlet | 7.5 mm O.D. hose barb | |
| Outlet | 7.5 mm O.D. hose barb | |
| Duty Cycle | Continuous | |
| Coil Insulation Class | Class B for UL | Class B equivalent |
| Mounting Dimensions | 66 (L) x 100 (W) mm<br>2 - 19/32" (L) x 2 - 15/16" (W) | |
| Weight | 0.82 kg<br>1.81 Lbs | |
| Leadwire Length | 200 mm<br>11 - 13/16" | |

### Application Examples

**Massage Devices**

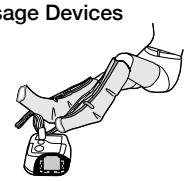

**Bedsore Prevention Mattress**

### External Dimensions (Unit: mm)

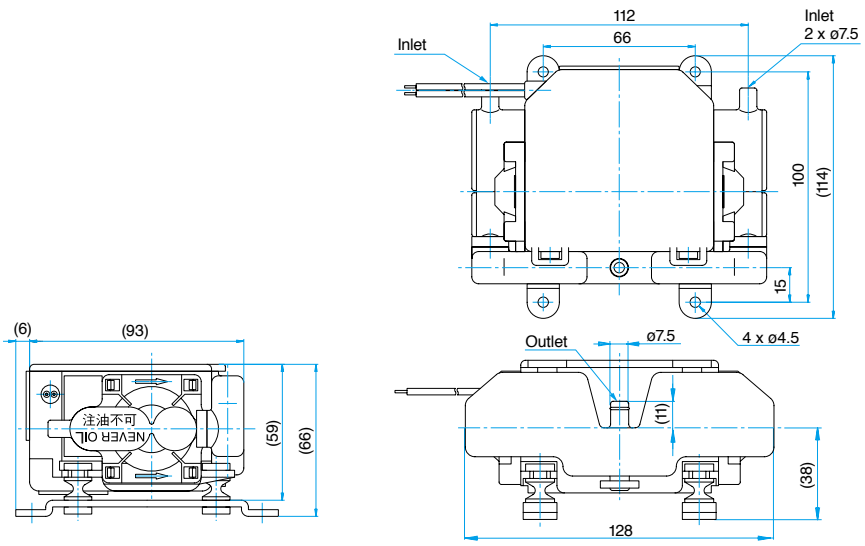

# Compressor

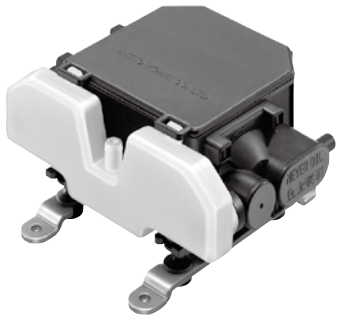

## Model VC0101

**Blower Type**

120 V | 230 V | 230 V

### Airflow & Power Consumption

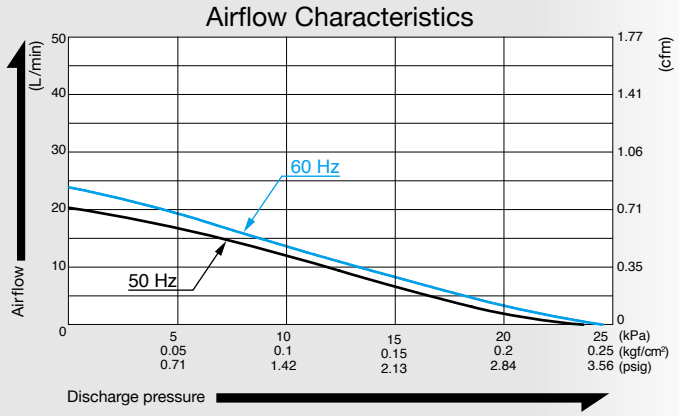


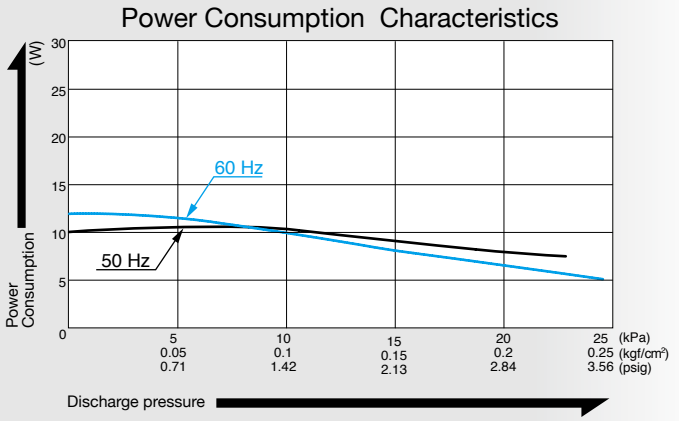


### Specifications

| | | |
|---|---|---|
| Rated Pressure | 10 kPa (0.1 kgf/cm²)<br>0.1 bar<br>1.42 psig | |
| Rated Airflow | 10 L/min<br>0.35 cfm | |
| Maximum Pressure | 20 kPa (0.2 kgf/cm²)<br>0.2 bar<br>2.84 psig | |
| Rated Voltage | 120 V AC | 230 V AC |
| Power Consumption | 11 W | |
| Rated Frequency | 60 Hz | 50 Hz |
| Rated Performance | 10,000 hours | |
| Working Pressure Range | 0 to 20 kPa<br>(0 to 0.2 kgf/cm²)<br>0 to 0.2 bar<br>0 to 2.84 psig | |
| Outlet | 7.5 mm O.D. hose barb | |
| Duty Cycle | Continuous | |
| Coil Insulation Class | Class A equivalent | Class B equivalent |
| Mounting Dimensions | 66 (L) x 100 (W) mm<br>2 - 19/32" (L) x 3 - 15/16" (W) | |
| Weight | 0.82 kg<br>1.81 Lbs | |
| Leadwire Length | 300 mm<br>7 - 7/8" | |

### Application Examples

**Massage Devices**

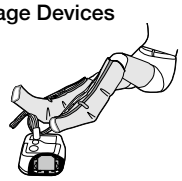

**Bedsore Prevention Mattress**

### External Dimensions (Unit: mm)

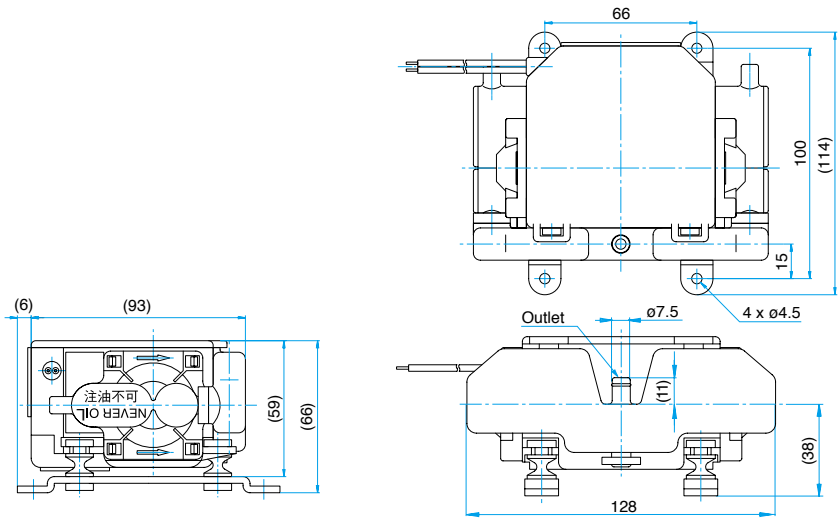

# Compressor

## Model VC0101S

**Blower Type**

120 V is made to order

CE 230 V | UKCA 230 V

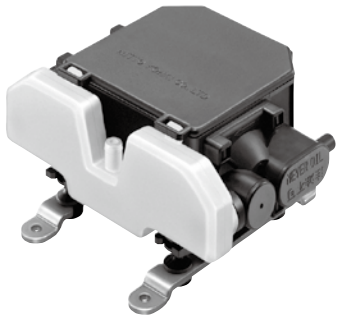

## Airflow & Power Consumption

### Airflow Characteristics

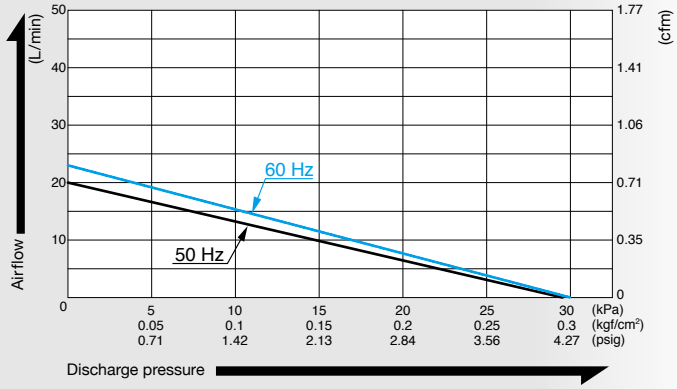


### Power Consumption Characteristics

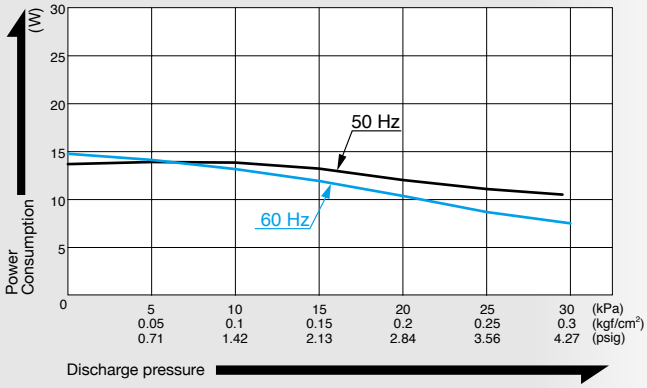


## Specifications

| | | |
|---|---|---|
| Rated Pressure | 5 kPa (0.05 kgf/cm²)<br>0.05 bar<br>0.71 psig | |
| Rated Airflow | 15 L/min<br>0.53 cfm | |
| Maximum Pressure | 26 kPa (0.26 kgf/cm²)<br>0.26 bar<br>3.70 psig | |
| Rated Voltage | 120 V AC *1 | 230 V AC |
| Power Consumption | 14 W | |
| Rated Frequency | 60 Hz | 50 Hz |
| Rated Performance | 5,000 hours | |
| Working Pressure Range | 0 to 26 kPa<br>(0 to 0.26 kgf/cm²)<br>0 to 0.26 bar<br>0 to 3.70 psig | |
| Outlet | 7.5 mm O.D. hose barb | |
| Duty Cycle | 60 minutes | |
| Coil Insulation Class | Class B equivalent | |
| Mounting Dimensions | 66 (L) x 100 (W) mm<br>2 - 19/32" (L) x 3 - 15/16" (W) | |
| Weight | 0.83 kg<br>1.81 Lbs | |
| Leadwire Length | 300 mm<br>11 - 13/16" | |

*1: Non-UL product. 120 V is made to oder.

## Application Examples

**Massage Devices**

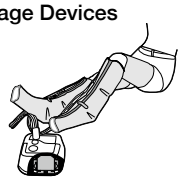

**Bedsore Prevention Mattress**

## External Dimensions (Unit: mm)

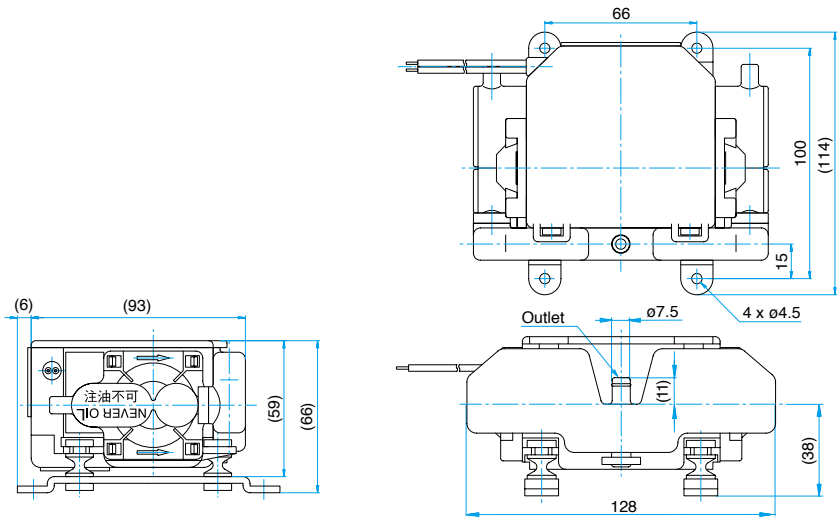

# Compressor and Vacuum Pump

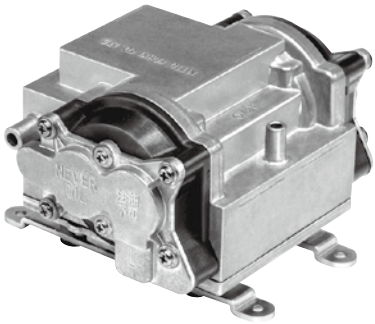

## Model VC0201B

**Dual Type**

120 V/230 V | 230 V | 230 V

### Airflow & Power Consumption

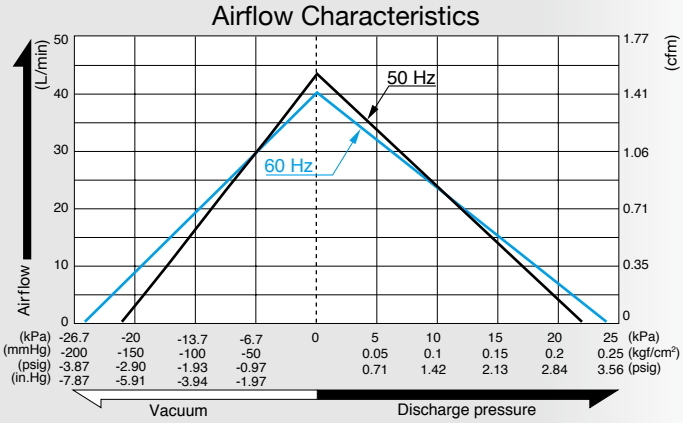


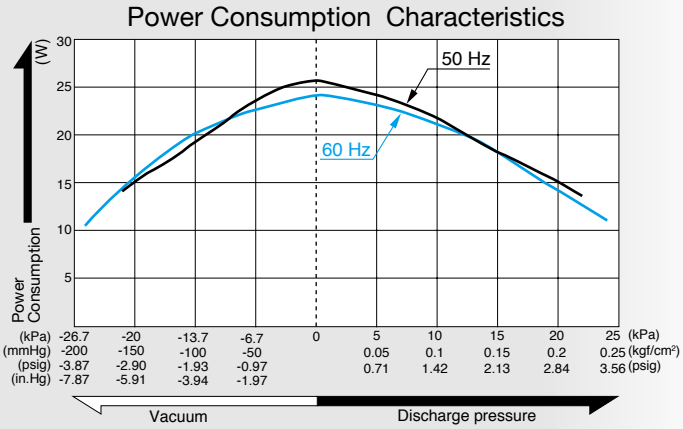


### Specifications

| | | |
|---|---|---|
| Rated Pressure | 10 kPa (0.1 kgf/cm²)<br>0.1 bar<br>1.42 psig | |
| Rated Airflow | 20 L/min<br>0.71 cfm | |
| Maximum Pressure | 18 kPa (0.18 kgf/cm²)<br>0.18 bar<br>2.56 psig | |
| Attainable Vacuum | -18.7 kPa (-140 mmHg)<br>-187 mbar<br>-5.51 in.Hg | |
| Rated Voltage | 120 V AC | 230 V AC |
| Power Consumption | 21 W | |
| Rated Frequency | 60 Hz | 50 Hz |
| Rated Performance | 10,000 hours | |
| Working Pressure Range | -18.7 kPa to 18 kPa<br>(-140 mmHg to 0.18 kgf/cm²)<br>-187 mbar to 0.18 bar<br>-5.51 in.Hg to 2.56 psig | |
| Inlet | 10.5 mm O.D. hose barb | |
| Outlet | 8.5 mm O.D. hose barb | |
| Duty Cycle | Continuous | |
| Coil Insulation Class | Class A for UL | |
| Mounting Dimensions | 125 (L) x 56 (W) mm<br>4 - 59/64" (L) x 2 - 13/64" (W) | |
| Weight | 1.7 kg<br>3.7 Lbs | |
| Leadwire Length | 300 mm<br>11 - 13/16" | |

### Application Examples

**Bedsore Prevention Mattress**

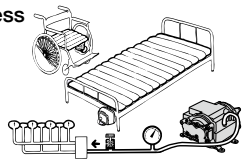

**Solder Fume Suction**

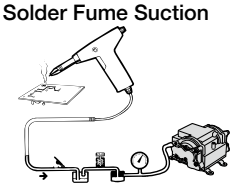

### External Dimensions (Unit: mm)

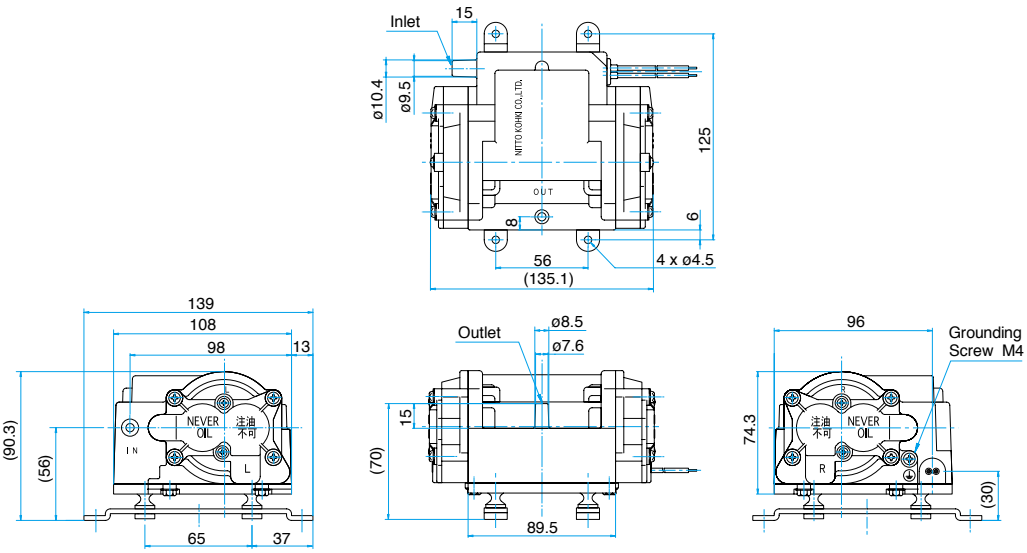

# Compressor

## Model VC0201B

**Blower Type**

120 V is made to order

CE 230 V | UKCA 230 V

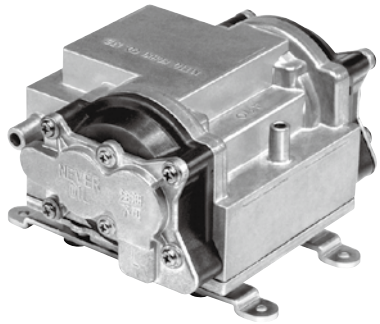

### Airflow & Power Consumption

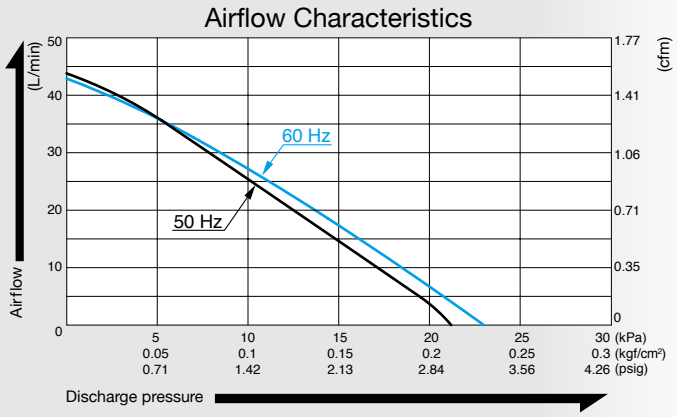


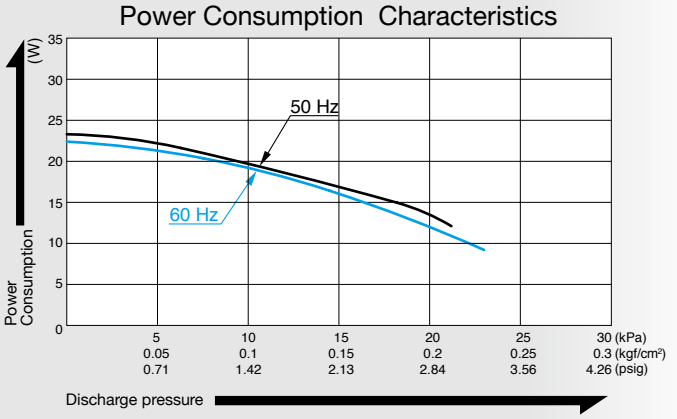


### Specifications

| | | |
|---|---|---|
| Rated Pressure | 10 kPa (0.1 kgf/cm²)<br>0.1 bar<br>1.42 psig | |
| Rated Airflow | 20 L/min<br>0.71 cfm | |
| Maximum Pressure | 18 kPa (0.18 kgf/cm²)<br>0.18 bar<br>2.56 psig | |
| Rated Voltage | 120 V AC | 230 V AC |
| Power Consumption | 21 W | |
| Rated Frequency | 60 Hz | 50 Hz |
| Rated Performance | 10,000 hours | |
| Working Pressure Range | 0 to 18 kPa<br>(0 to 0.18 kgf/cm²)<br>0 to 0.18 bar<br>0 to 2.56 psig | |
| Outlet | 8.5 mm O.D. hose barb | |
| Duty Cycle | Continuous | |
| Coil Insulation Class | Class A equivalent | Class E equivalent |
| Mounting Dimensions | 125 (L) x 56 (W) mm<br>4 - 59/64" (L) x 2 - 13/64" (W) | |
| Weight | 1.7 kg<br>3.7 Lbs | |
| Leadwire Length | 300 mm<br>11 - 13/16" | |

### Application Examples

**Bedsore Prevention Mattress**

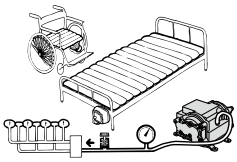

### External Dimensions (Unit: mm)

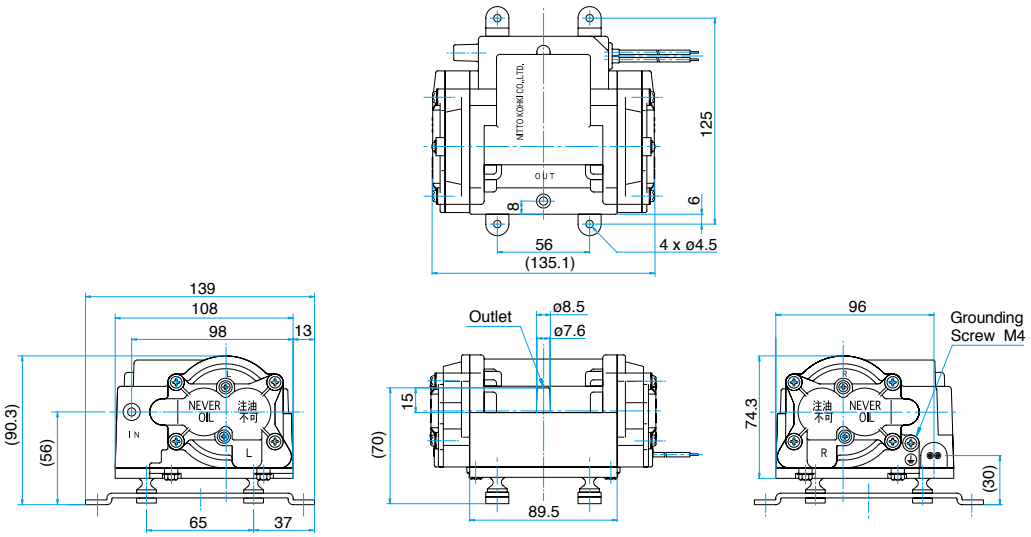

# Compressor and Vacuum Pump

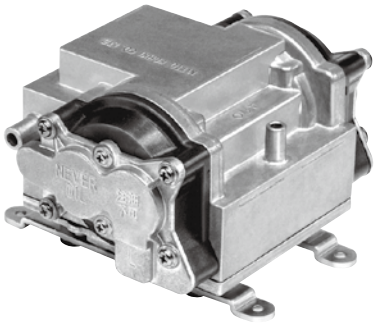

## Model VC0301B

**Dual Type**

120 V | 230 V | 230 V

### Airflow & Power Consumption

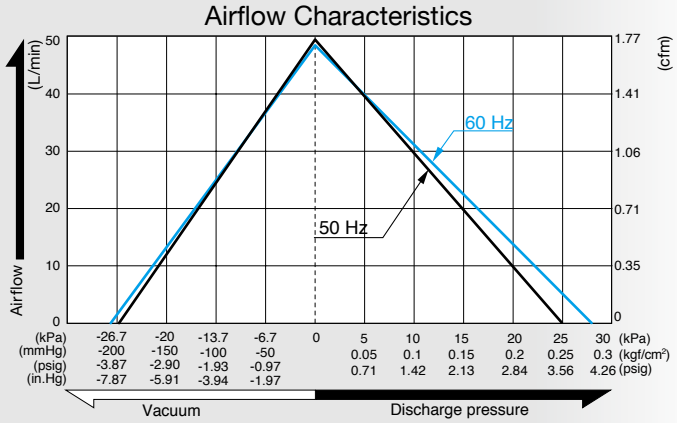


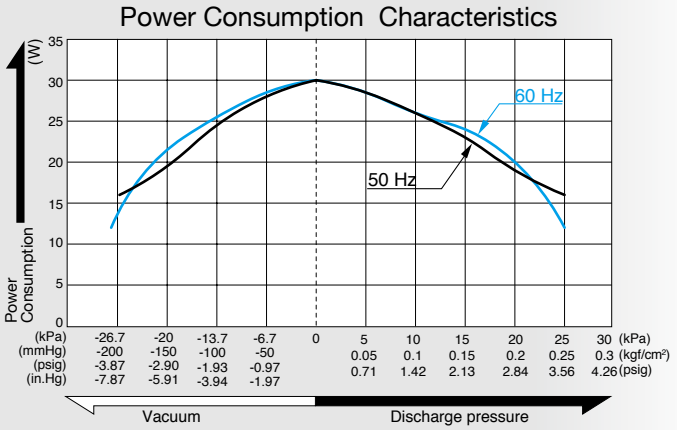


### Specifications

| | | |
|---|---|---|
| Rated Pressure | 10 kPa (0.1 kgf/cm²)<br>0.1 bar<br>1.42 psig | |
| Rated Airflow | 25 L/min<br>0.88 cfm | |
| Maximum Pressure | 20 kPa (0.2 kgf/cm²)<br>0.2 bar<br>2.84 psig | |
| Attainable Vacuum | -21.3 kPa (-160 mmHg)<br>-213 mbar<br>-6.3 in.Hg | |
| Rated Voltage | 120 V AC | 230 V AC |
| Power Consumption | 27 W | |
| Rated Frequency | 60 Hz | 50 Hz |
| Rated Performance | 10,000 hours | |
| Working Pressure Range | -21.3 kPa to 20 kPa<br>(-160 mmHg to 0.2 kgf/cm²)<br>-213 mbar to 0.2 bar<br>-6.3 in.Hg to 2.84 psig | |
| Inlet | 10.5 mm O.D. hose barb | |
| Outlet | 8.5 mm O.D. hose barb | |
| Duty Cycle | Continuous | |
| Coil Insulation Class | Class B equivalent | |
| Mounting Dimensions | 125 (L) x 56 (W) mm<br>4 - 59/64" (L) x 2 - 13/64" (W) | |
| Weight | 1.7 kg<br>3.7 Lbs | |
| Leadwire Length | 300 mm<br>11 - 13/16" | |

### Application Examples

**Bedsore Prevention Mattress**

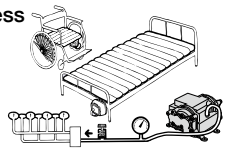

**Solder Fume Suction**

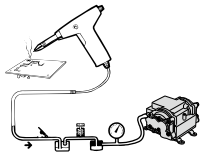

### External Dimensions (Unit: mm)

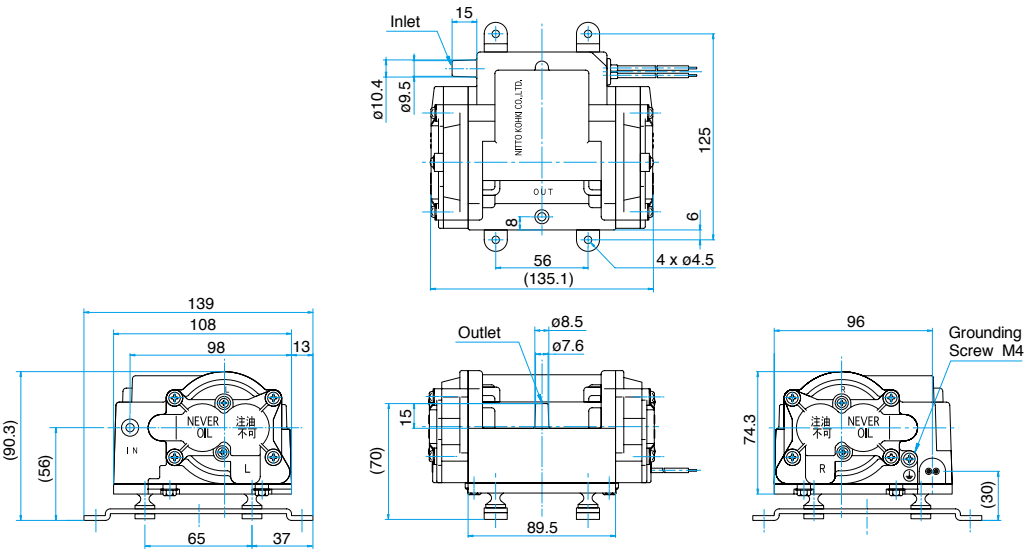

# Compressor

## Model VC0301B

**Blower Type**

120 V is made to order

CE 230 V | UKCA 230 V

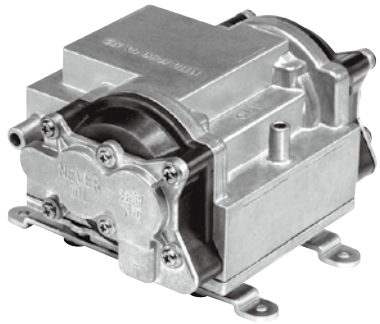

### Airflow & Power Consumption

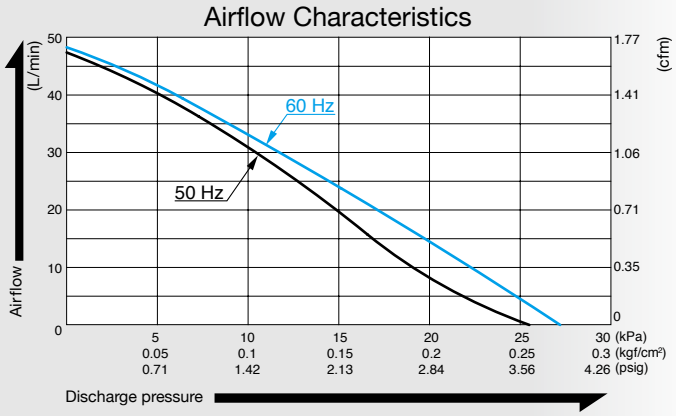


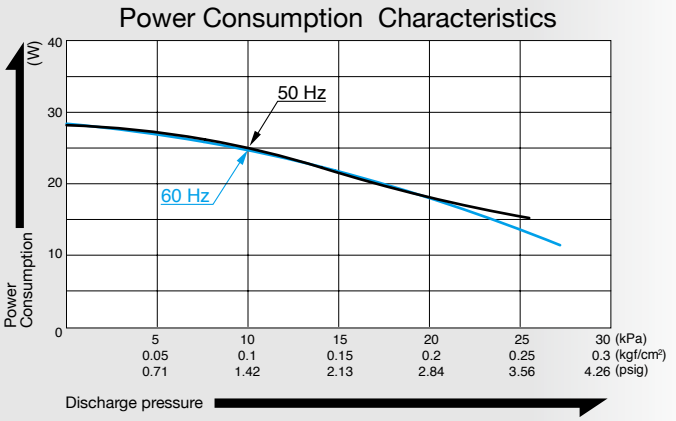


### Specifications

| | | |
|---|---|---|
| Rated Pressure | 10 kPa (0.1 kgf/cm²)<br>0.1 bar<br>1.42 psig | |
| Rated Airflow | 25 L/min<br>0.88 cfm | |
| Maximum Pressure | 20 kPa (0.2 kgf/cm²)<br>0.2 bar<br>2.84 psig | |
| Rated Voltage | 120 V AC | 230 V AC |
| Power Consumption | 27 W | |
| Rated Frequency | 60 Hz | 50 Hz |
| Rated Performance | 10,000 hours | |
| Working Pressure Range | 0 to 20 kPa<br>(0 to 0.2 kgf/cm²)<br>0 to 0.2 bar<br>0 to 2.84 psig | |
| Outlet | 8.5 mm O.D. hose barb | |
| Duty Cycle | Continuous | |
| Coil Insulation Class | Class B equivalent | |
| Mounting Dimensions | 125 (L) x 56 (W) mm<br>4 - 59/64" (L) x 2 - 13/64" (W) | |
| Weight | 1.7 kg<br>3.7 Lbs | |
| Leadwire Length | 300 mm<br>11 - 13/16" | |

### Application Examples

**Bedsore Prevention Mattress**

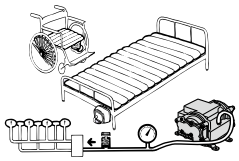

### External Dimensions (Unit: mm)

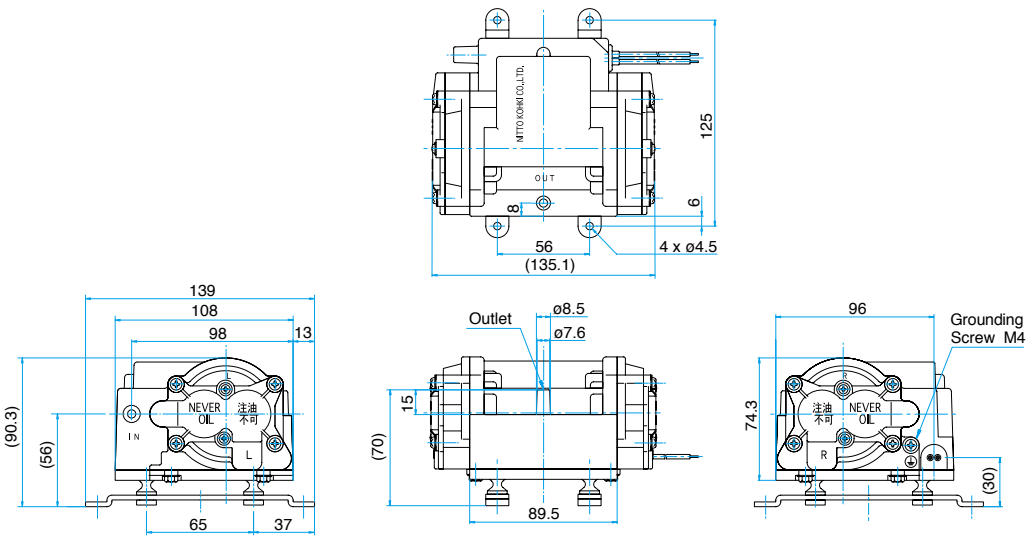

DC Motor Driven
Piston Pump
Diaphragm Pump

# PISTON PUMP
# DIAPHRAGM PUMP

## DP series

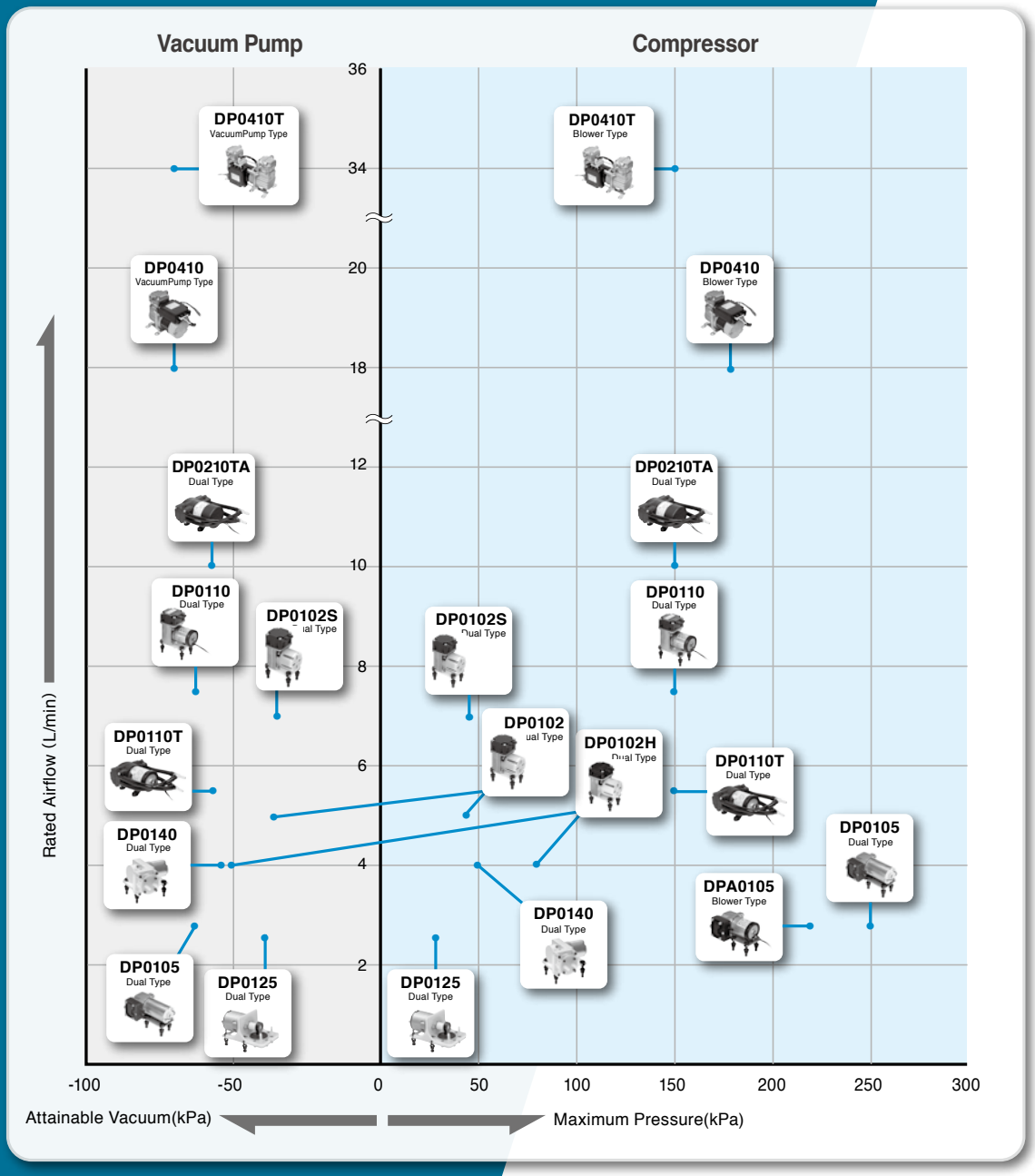


Page


**Piston Pump**

DP0105-X1 — 63
DP0105-Y1 — 64
DPA0105-X1 — 65
DPA0105-Y1 — 66
DP0410-X1 — 67
DP0410-Y1 — 68
DP0410-X2 — 69
DP0410-Y2 — 70
DP0410T-Y1 — 71
DP0410T-Y2 — 72

**Diaphragm Pump**

DP0125 — 73
DP0140 — 74
DP0102 — 75
DP0102S — 76
DP0102H-X1 — 77
DP0102H-X2 — 78
DP0110-X1 — 79
DP0110-Y1 — 80
DP0110-X3 — 81
DP0110T-X1 — 82
DP0110T-Y1 — 83
DP0210TA-Y1 — 84

# Compressor and Vacuum Pump

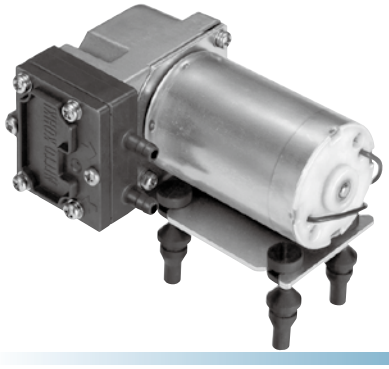

## Model DP0105-X1

CE 12 V | UKCA 12 V

**Brush DC Motor** **12 V DC**

### Airflow & Power Consumption

Airflow Characteristics

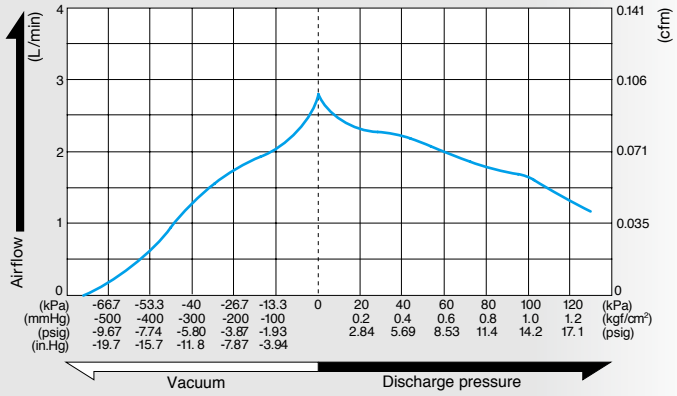


Current Characteristics

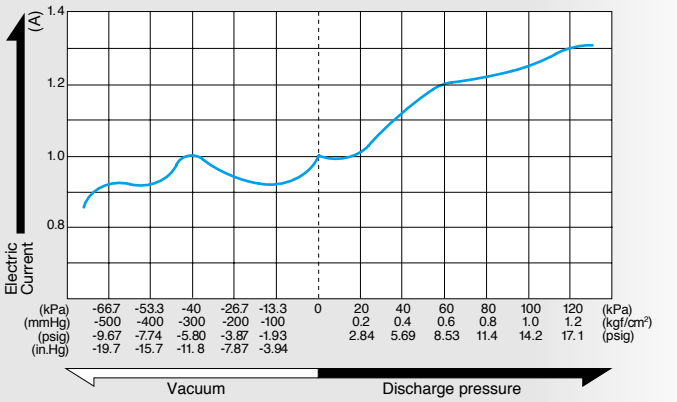


### Specifications

| | |
|---|---|
| Attainable Vacuum | -66.7 kPa (-500 mmHg)<br>-667 mbar<br>-19.7 in.Hg |
| Free Air Displacement | 2.8 L/min<br>0.099 cfm |
| Rated Voltage | 12 V DC |
| Maximum Pressure | 250 kPa (2.5 kgf/cm²)<br>2.5 bar<br>35.6 psig |
| Maximum Current | 1.9 A |
| Duty Cycle | 30 minutes |
| Working Pressure Range | -66.7 to 100 kPa<br>(-500 mmHg to 1 kgf/cm²)<br>-667 mbar to 1 bar<br>-19.7 in.Hg to 14.2 psig |
| Rated Performance (MTTF) | 2,000 hours |
| Inlet | 5 mm O.D. straight barb |
| Outlet | 5 mm O.D. straight barb |
| Coil Insulation Class | Class E equivalent |
| Mounting Dimensions | 42 (L) x 24.5 (W) mm<br>1 - 21/32" (L) x 1 - 31/32" (W) |
| Weight | 0.36 kg<br>0.79 Lbs |
| Leadwire Length | 360 mm<br>14 - 11/64" |

### Application Examples

**Vending Machines**

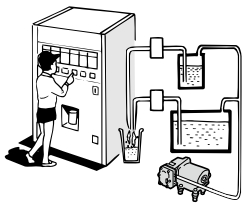

### External Dimensions (Unit: mm)

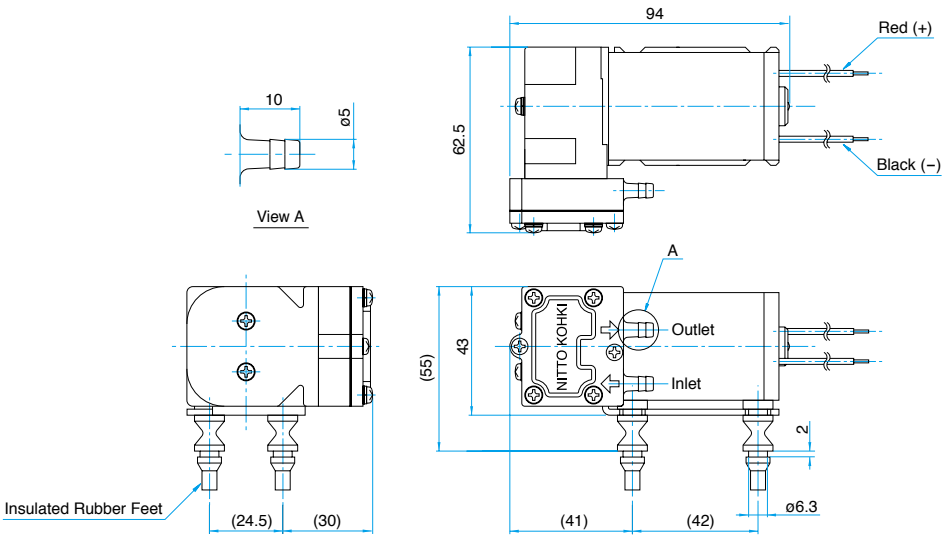

# Compressor and Vacuum Pump

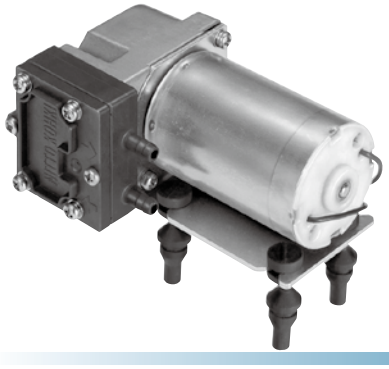

## Model DP0105-Y1

CE 24 V | UK CA 24 V

**Brush DC Motor** **24 V DC**

### Airflow & Power Consumption

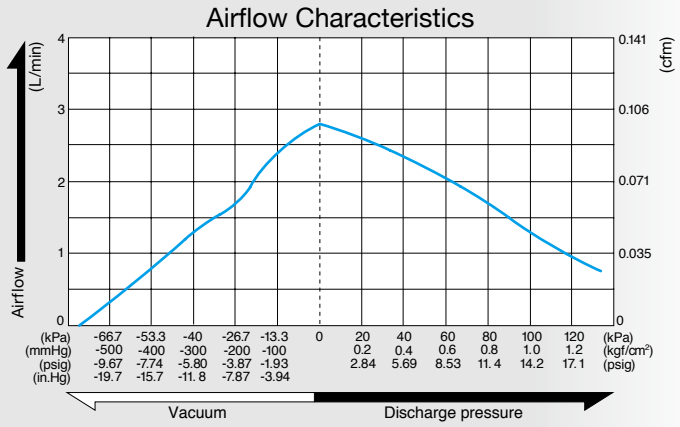


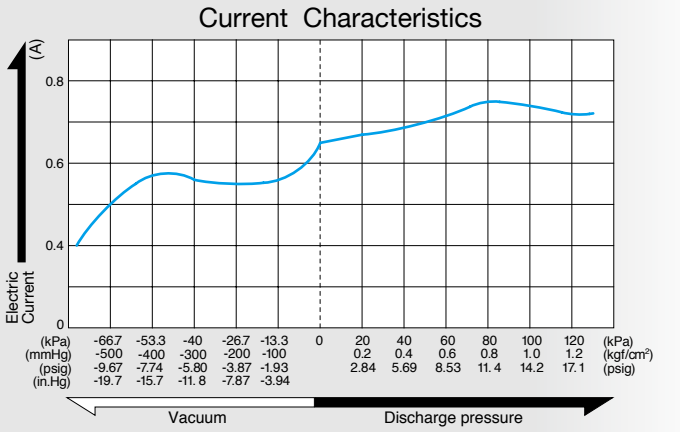


### Specifications

| | |
|---|---|
| Attainable Vacuum | -66.7 kPa (-500 mmHg)<br>-667 mbar<br>-19.7 in.Hg |
| Free Air Displacement | 2.8 L/min<br>0.099 cfm |
| Rated Voltage | 24 V DC |
| Maximum Pressure | 250 kPa (2.5 kgf/cm²)<br>2.5 bar<br>35.6 psig |
| Maximum Current | 0.95 A |
| Duty Cycle | 30 minutes |
| Working Pressure Range | -66.7 to 100 kPa<br>(-500 mmHg to 1 kgf/cm²)<br>-667 mbar to 1 bar<br>-19.7 in.Hg to 14.2 psig |
| Rated Performance (MTTF) | 2,000 hours |
| Inlet | 5 mm O.D. straight barb |
| Outlet | 5 mm O.D. straight barb |
| Coil Insulation Class | Class E equivalent |
| Mounting Dimensions | 42 (L) x 24.5 (W) mm<br>1 - 21/32" (L) x 1 - 31/32" (W) |
| Weight | 0.36 kg<br>0.79 Lbs |
| Leadwire Length | 360 mm<br>14 - 11/64" |

### Application Examples

**Vending Machines**

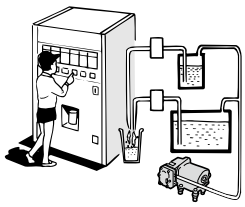

### External Dimensions (Unit: mm)

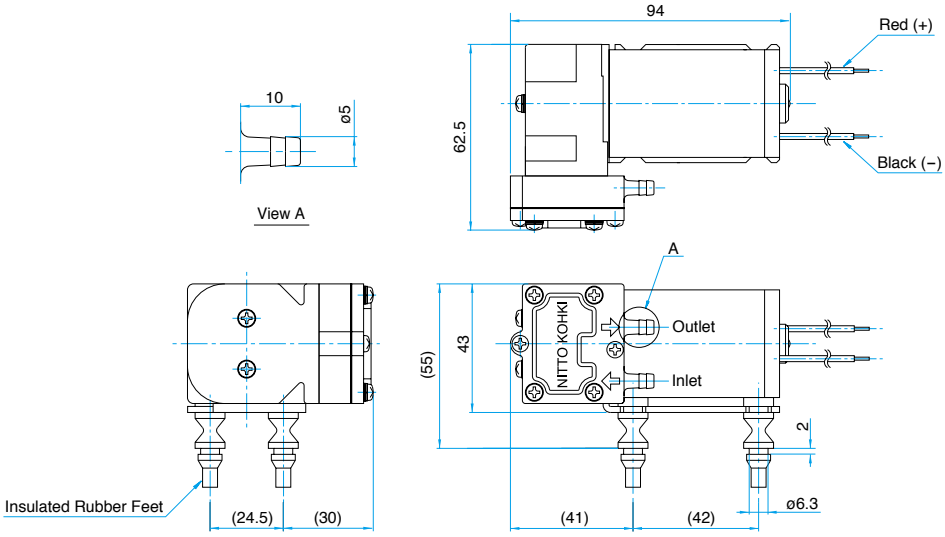

# Compressor

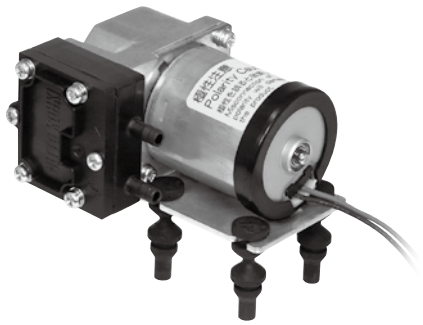

## Model DPA0105-X1

Brushless DC Motor 12 V DC

CE 12 V UKCA 12 V

### Airflow & Power Consumption

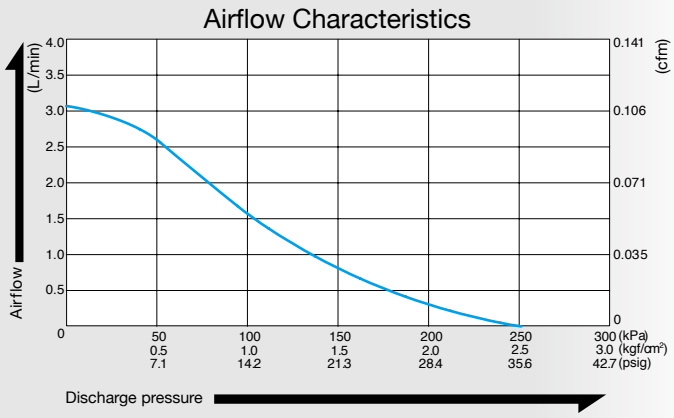


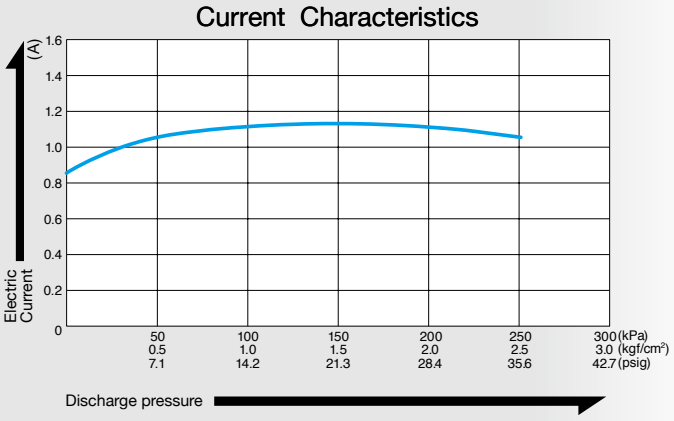


### Specifications

| | |
|---|---|
| Free Air Displacement | 2.8 L/min<br>0.099 cfm |
| Rated Voltage | 12 V DC |
| Maximum Pressure | 220 kPa (2.2 kgf/cm²)<br>2.2 bar<br>31.3 psig |
| Maximum Current | 1.4 A |
| Duty Cycle | Continuous |
| Working Pressure Range | 0 to 100 kPa<br>(0 to 1 kgf/cm²)<br>0 to 1 bar<br>0 to 14.2 psig |
| Rated Performance (MTTF) | 5,000 hours |
| Inlet | 5 mm O.D. straight barb |
| Outlet | 5 mm O.D. straight barb |
| Coil Insulation Class | Class A equivalent |
| Mounting Dimensions | 32 (L) x 27.5 (W) mm<br>1 - 9/32" (L) x 1 - 5/64" (W) |
| Weight | 0.3 kg<br>0.66 Lbs |
| Leadwire Length | 360 mm<br>14 - 11/64" |

### Application Examples

Vending Machines

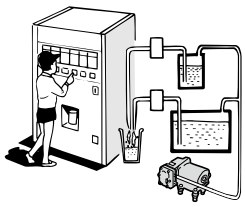

### External Dimensions (Unit: mm)

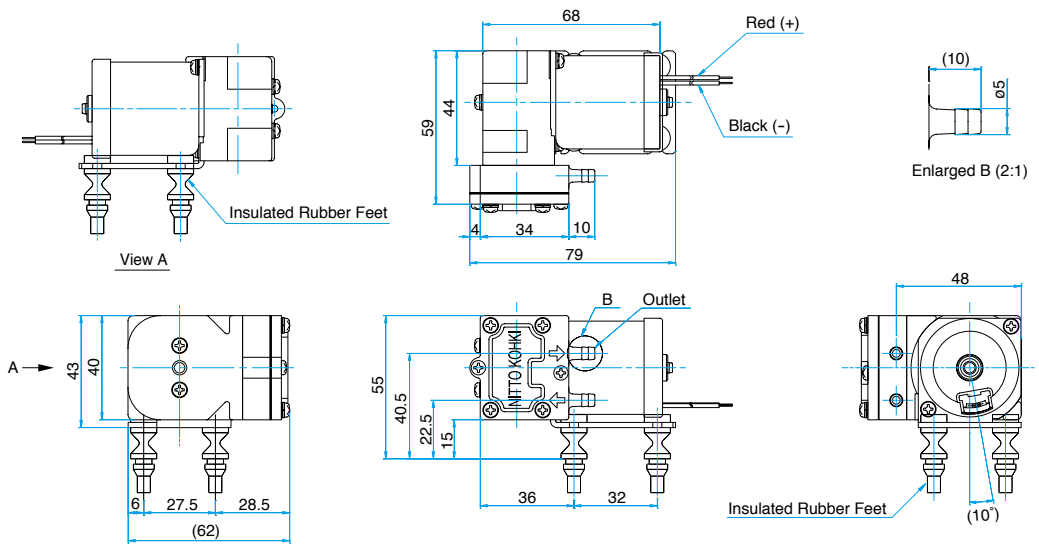

# Compressor

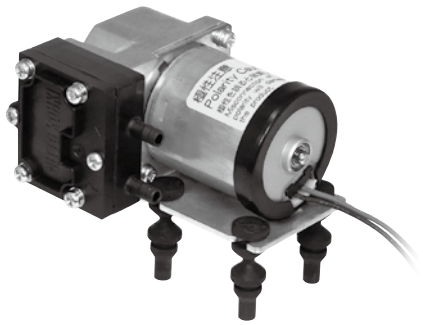

## Model DPA0105-Y1

Brushless DC Motor 24 V DC

CE 24 V UKCA 24 V

### Airflow & Power Consumption

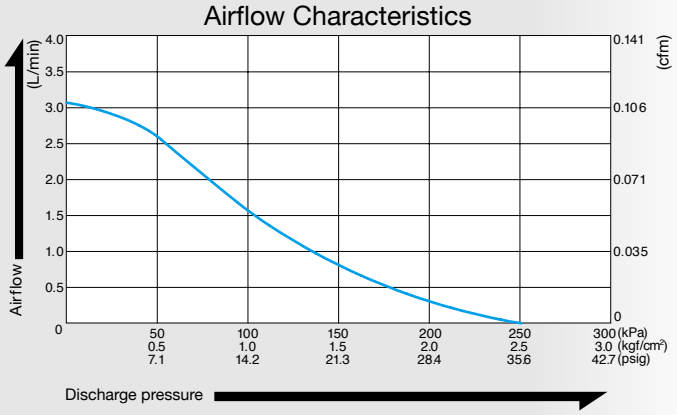


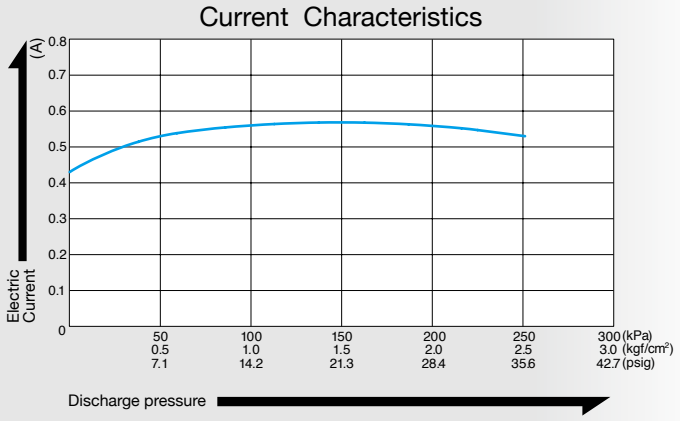


### Specifications

| | |
|---|---|
| Free Air Displacement | 2.8 L/min<br>0.099 cfm |
| Rated Voltage | 24 V DC |
| Maximum Pressure | 220 kPa (2.2 kgf/cm²)<br>2.2 bar<br>31.3 psig |
| Maximum Current | 0.7 A |
| Duty Cycle | Continuous |
| Working Pressure Range | 0 to 100 kPa<br>(0 to 1 kgf/cm²)<br>0 to 1 bar<br>0 to 14.2 psig |
| Rated Performance (MTTF) | 5,000 hours |
| Inlet | 5 mm O.D. straight barb |
| Outlet | 5 mm O.D. straight barb |
| Coil Insulation Class | Class A equivalent |
| Mounting Dimensions | 32 (L) x 27.5 (W) mm<br>1 - 9/32" (L) x 1 - 5/64" (W) |
| Weight | 0.3 kg<br>0.66 Lbs |
| Leadwire Length | 360 mm<br>14 - 11/64" |

### Application Examples

Vending Machines

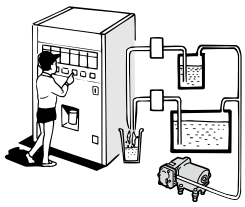

### External Dimensions (Unit: mm)

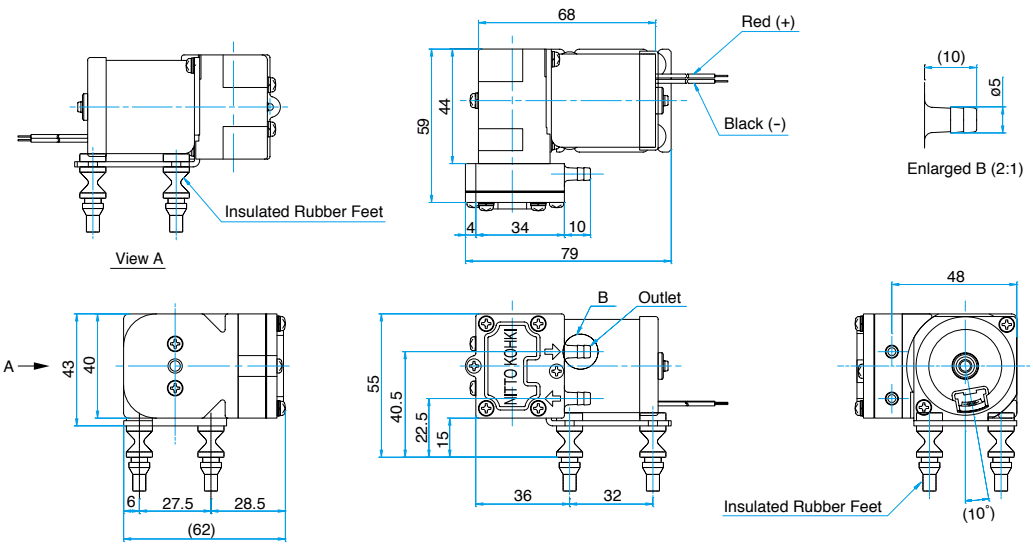

# Vacuum Pump

## Model DP0410-X1

PWM controllable

Brushless DC Motor 12 V DC

CE 12 V | UKCA 12 V

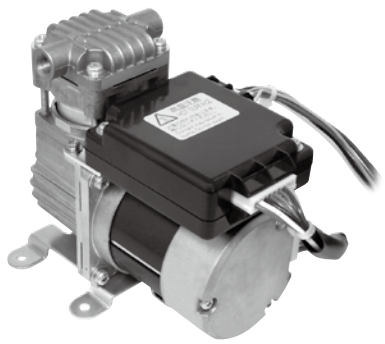

### Airflow & Power Consumption

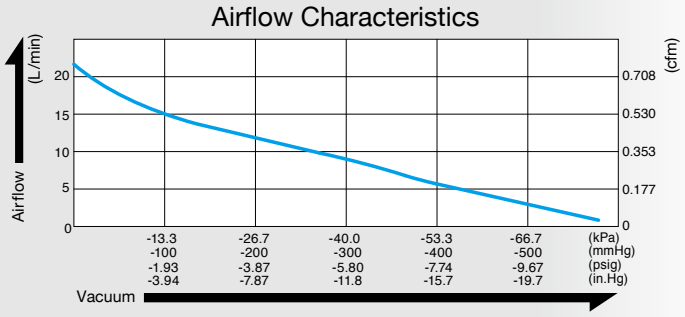


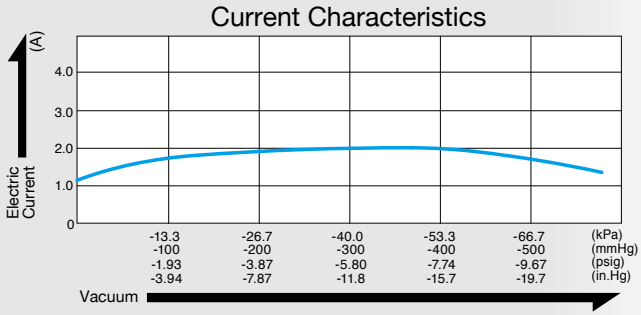


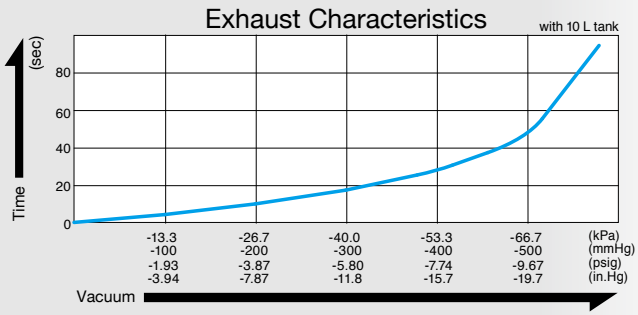


### Specifications

| | |
|---|---|
| Attainable Vacuum | -77.3 kPa (-580 mmHg)<br>-773 mbar<br>-22.8 in.Hg |
| Free Air Displacement | 18 L/min<br>0.64 cfm |
| Rated Voltage | 12 V DC |
| Maximum Current | 2.5 A |
| Duty Cycle | Continuous |
| Rated Performance (MTTF) | 10,000 hours |
| Inlet | Rc1/8 |
| Outlet | Rc1/8 |
| Coil Insulation Class | Class E equivalent |
| Mounting Dimensions | 70 (L) x 45 (W) mm<br>2 - 3/4" (L) x 1 - 49/64" (W) |
| Weight | 1.1 kg<br>2.4 Lbs |
| Leadwire Length | 285 mm<br>11 - 7/32" |

### Application Examples

Vacuum glass sheet handling equipment

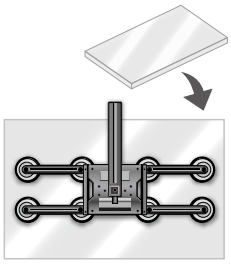

### External Dimensions (Unit: mm)

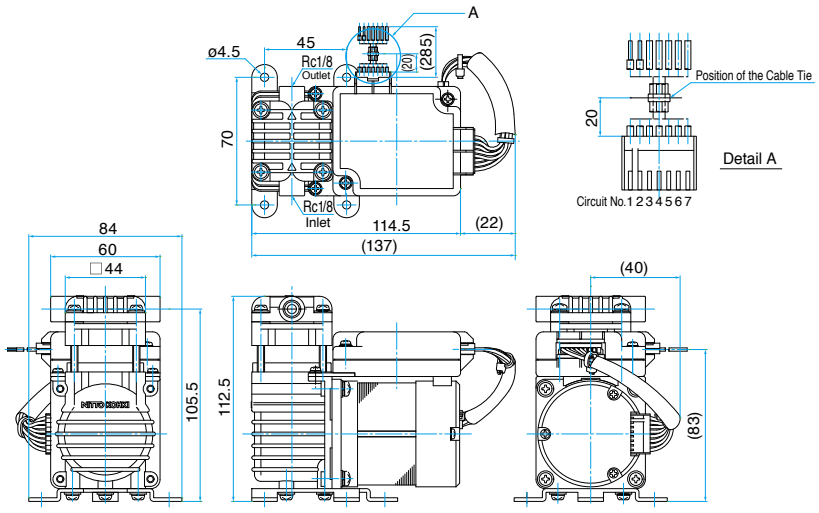


Connection Table

| | | Power Source | | Control Signal | | | | |
|---|---|---|---|---|---|---|---|---|
| Circuit No. | | 1 | 2 | 3 | 4 | 5 | 6 | 7 |
| Cord Color | | Red | Black | Brown | Orange | Yellow | Green | Gray |
| Function | | V+ | V- | DRIVE /FREE | PULSE | ALARM | SPEED | SGND |
| Option | Function Off | ON | | OFF | | | | |
| | Function On | ON | | ON | | | | |
| Cord Size | | AWG20 | | AWG22 | | | | |
| Line Type | | UL1007 | | | | | | |

*Control function is "OFF" by default.

- Be sure to secure the lead wires with a cable tie. (See the detail A.) If they are not secured, poor contact of the connector may occur and result in failure.
- For the details of wiring, please see the user's instructions.

# Vacuum Pump

## Model DP0410-Y1

PWM controllable

Brushless DC Motor 24 V DC

CE 24 V | UKCA 24 V

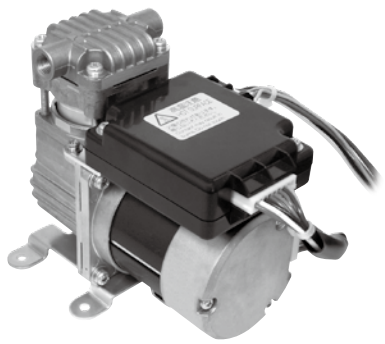

## Airflow & Power Consumption

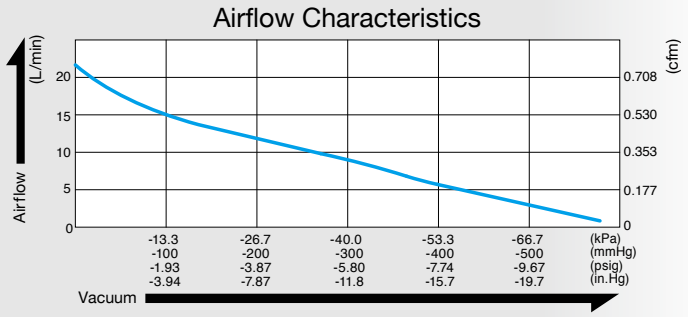


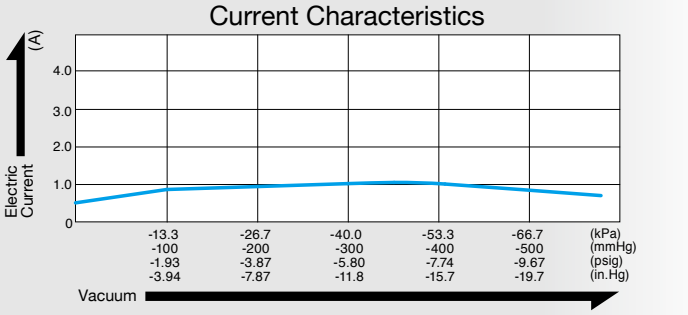


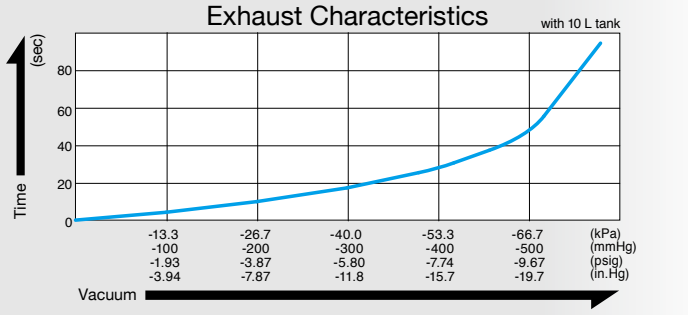


## Specifications

| | |
|---|---|
| Attainable Vacuum | -77.3 kPa (-580 mmHg)<br>-773 mbar<br>-22.8 in.Hg |
| Free Air Displacement | 18 L/min<br>0.64 cfm |
| Rated Voltage | 24 V DC |
| Maximum Current | 1.5 A |
| Duty Cycle | Continuous |
| Rated Performance (MTTF) | 10,000 hours |
| Inlet | Rc1/8 |
| Outlet | Rc1/8 |
| Coil Insulation Class | Class E equivalent |
| Mounting Dimensions | 70 (L) x 45 (W) mm<br>2 - 3/4" (L) x 1 - 49/64" (W) |
| Weight | 1.1 kg<br>2.43 Lbs |
| Leadwire Length | 285 mm<br>11 - 7/32" |

## Application Examples

Vacuum glass sheet handling equipment

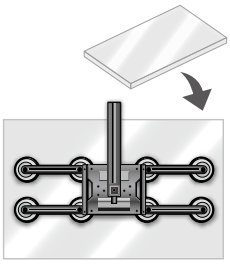

## External Dimensions (Unit: mm)

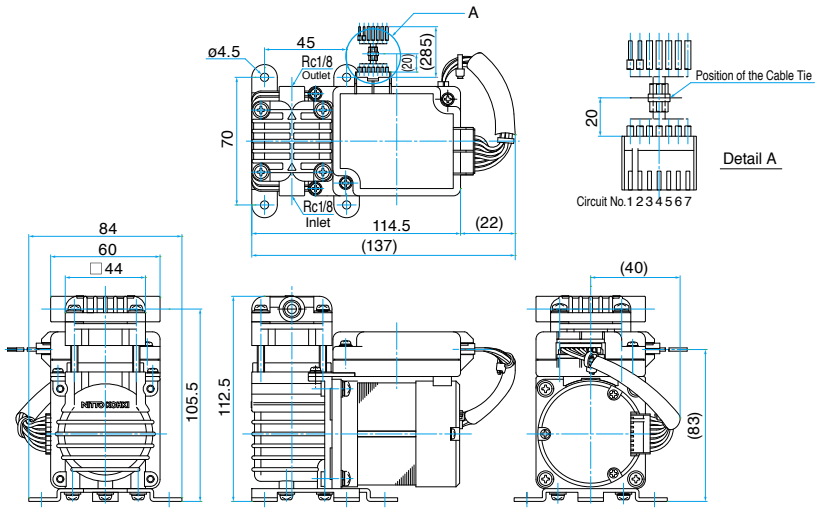


Connection Table

| | | Power Source | | Control Signal | | | | |
|---|---|---|---|---|---|---|---|---|
| Circuit No. | | 1 | 2 | 3 | 4 | 5 | 6 | 7 |
| Cord Color | | Red | Black | Brown | Orange | Yellow | Green | Gray |
| Function | | V+ | V- | DRIVE /FREE | PULSE | ALARM | SPEED | SGND |
| Option | Function Off | ON | | OFF | | | | |
| | Function On | ON | | ON | | | | |
| Cord Size | | AWG20 | | AWG22 | | | | |
| Line Type | | UL1007 | | | | | | |

*Control function is "OFF" by default.

- Be sure to secure the lead wires with a cable tie. (See the detail A.) If they are not secured, poor contact of the connector may occur and result in failure.
- For the details of wiring, please see the user's instructions.

# Compressor

## Model DP0410-X2

PWM controllable

Brushless DC Motor 12 V DC

CE 12 V | UK CA 12 V

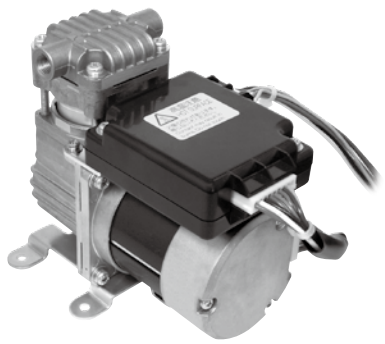

### Airflow & Power Consumption

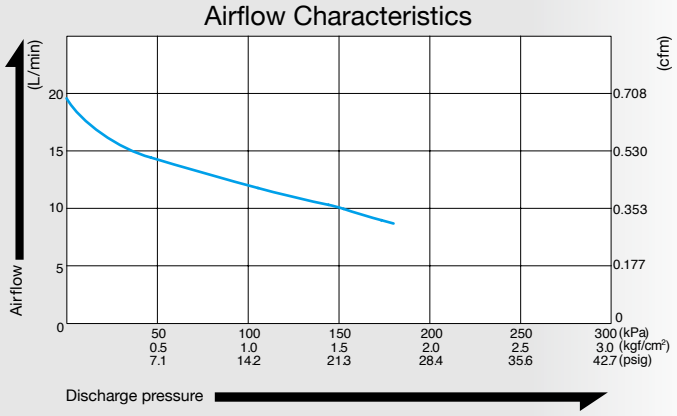


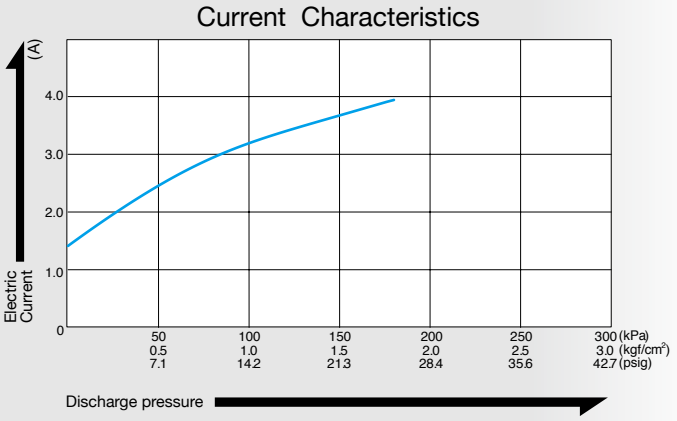


### Specifications

| | |
|---|---|
| Free Air Displacement | 18 L/min<br>0.64 cfm |
| Rated Voltage | 12 V DC |
| Maximum Pressure | 180 kPa (1.8 kgf/cm²)<br>1.8 bar<br>25.6 psig |
| Maximum Current | 5.0 A |
| Duty Cycle | Continuous |
| Working Pressure Range | 0 to 180 kPa<br>(0 to 1.8 kgf/cm²)<br>0 to 1.8 bar<br>0 to 25.6 psig |
| Rated Performance (MTTF) | 10,000 hours |
| Inlet | ISO RC 1/8 |
| Outlet | ISO RC 1/8 |
| Coil Insulation Class | Class E equivalent |
| Mounting Dimensions | 70 (L) x 45 (W) mm<br>2 - 3/4" (L) x 1 - 49/64" (W) |
| Weight | 1.1 kg<br>2.4 Lbs |
| Leadwire Length | 285 mm<br>11 - 7/32" |

### Application Examples

Air Cylinder/Chuck Driver

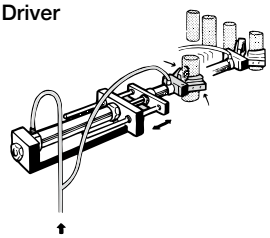

### External Dimensions (Unit: mm)

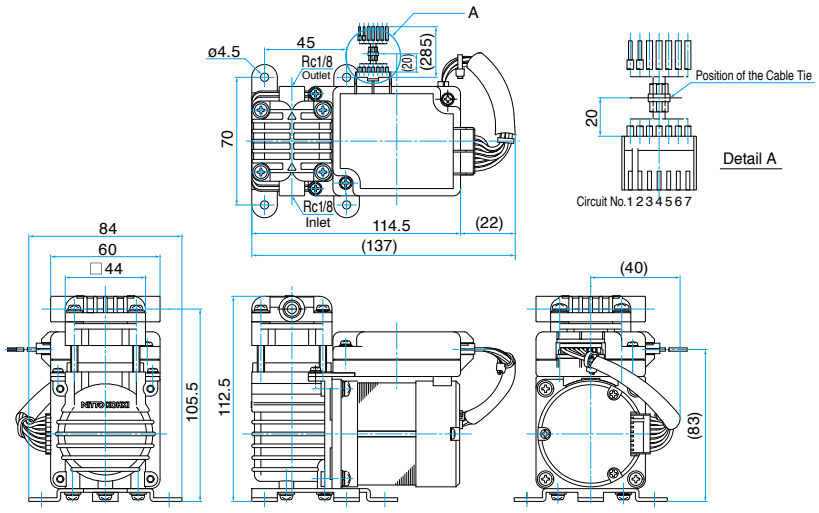


Connection Table

| | | Power Source | | Control Signal | | | | |
|---|---|---|---|---|---|---|---|---|
| Circuit No. | | 1 | 2 | 3 | 4 | 5 | 6 | 7 |
| Cord Color | | Red | Black | Brown | Orange | Yellow | Green | Gray |
| Function | | V+ | V- | DRIVE /FREE | PULSE | ALARM | SPEED | SGND |
| Option | Function Off | ON | | OFF | | | | |
| | Function On | ON | | ON | | | | |
| Cord Size | | AWG20 | | AWG22 | | | | |
| Line Type | | UL1007 | | | | | | |

*Control function is "OFF" by default.

- Be sure to secure the lead wires with a cable tie. (See the detail A.) If they are not secured, poor contact of the connector may occur and result in failure.
- For the details of wiring, please see the user's instructions.

# Compressor

## Model DP0410-Y2

PWM controllable

Brushless DC Motor 24 V DC

CE 24 V | UK CA 24 V

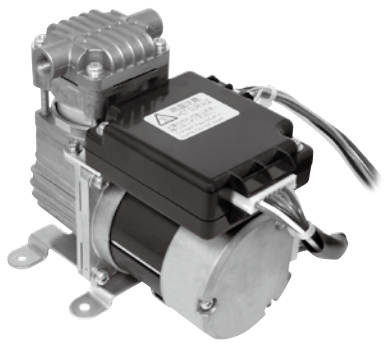

### Airflow & Power Consumption

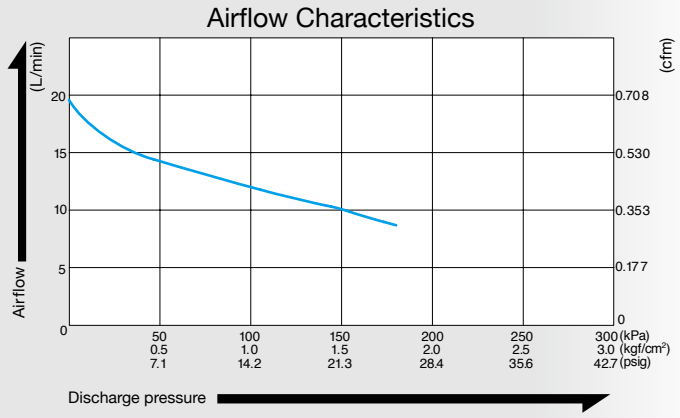


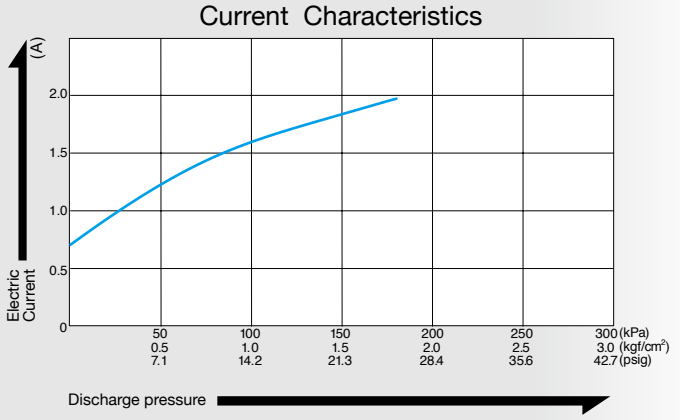


### Specifications

| | |
|---|---|
| Free Air Displacement | 18 L/min<br>0.64 cfm |
| Rated Voltage | 24 V DC |
| Maximum Pressure | 180 kPa (1.8 kgf/cm²)<br>1.8 bar<br>25.6 psig |
| Maximum Current | 2.7 A |
| Duty Cycle | Continuous |
| Working Pressure Range | 0 to 180 kPa<br>(0 to 1.8 kgf/cm²)<br>0 to 1.8 bar<br>0 to 25.6 psig |
| Rated Performance (MTTF) | 10,000 hours |
| Inlet | ISO RC 1/8 |
| Outlet | ISO RC 1/8 |
| Coil Insulation Class | Class E equivalent |
| Mounting Dimensions | 70 (L) x 45 (W) mm<br>2 - 3/4" (L) x 1 - 49/64" (W) |
| Weight | 1.1 kg<br>2.4 Lbs |
| Leadwire Length | 285 mm<br>11 - 7/32" |

### Application Examples

Air Cylinder/Chuck Driver

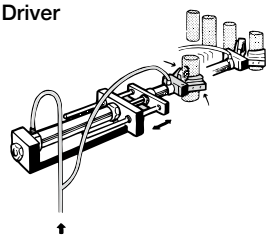

### External Dimensions (Unit: mm)

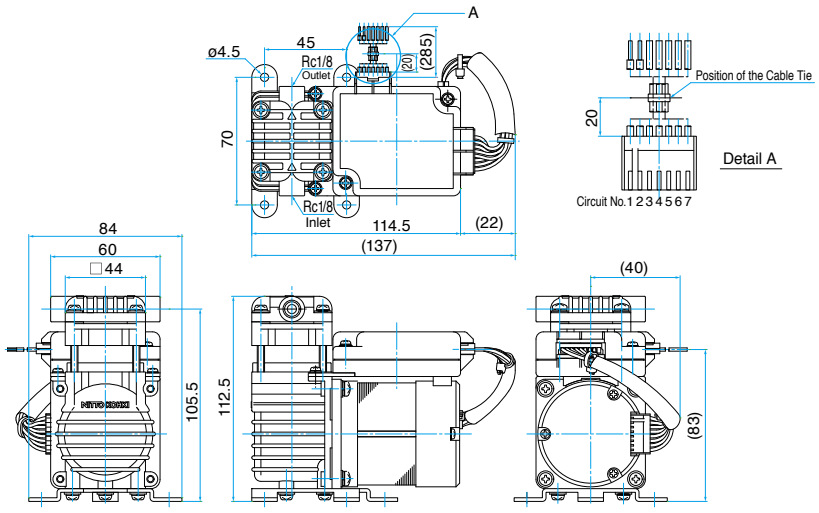


Connection Table

| | | Power Source | | Control Signal | | | | |
|---|---|---|---|---|---|---|---|---|
| Circuit No. | | 1 | 2 | 3 | 4 | 5 | 6 | 7 |
| Cord Color | | Red | Black | Brown | Orange | Yellow | Green | Gray |
| Function | | V+ | V- | DRIVE /FREE | PULSE | ALARM | SPEED | SGND |
| Option | Function Off | ON | | OFF | | | | |
| | Function On | ON | | ON | | | | |
| Cord Size | | AWG20 | | AWG22 | | | | |
| Line Type | | UL1007 | | | | | | |

*Control function is "OFF" by default.

- Be sure to secure the lead wires with a cable tie. (See the detail A.) If they are not secured, poor contact of the connector may occur and result in failure.
- For the details of wiring, please see the user's instructions.

# Vacuum Pump

## Model DP0410T-Y1

PWM controllable

Brushless DC Motor 24 V DC

CE 24 V | UKCA 24 V

## Airflow & Power Consumption

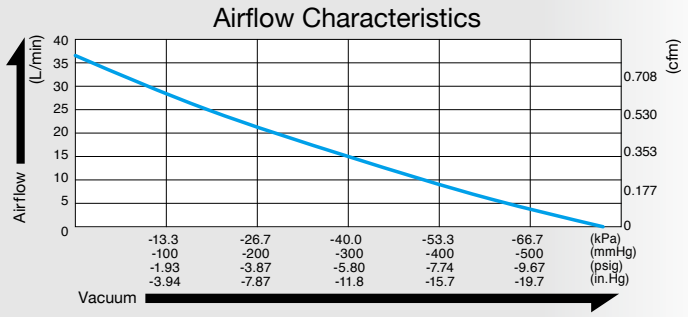


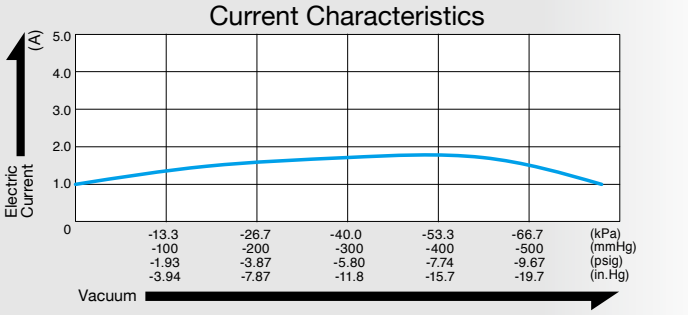


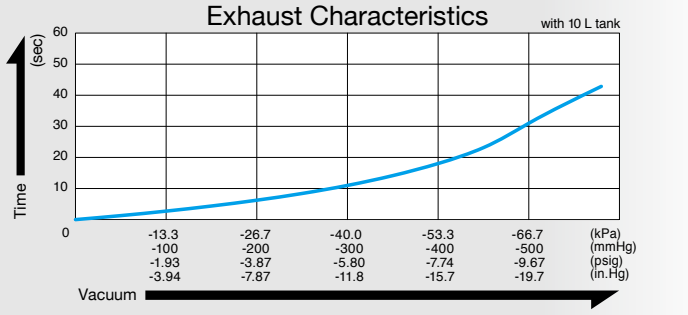


## Specifications

| | |
|---|---|
| Attainable Vacuum | -77.3 kPa (-580 mmHg)<br>-773 mbar<br>-22.8 in.Hg |
| Free Air Displacement | 34 L/min<br>1.2 cfm |
| Rated Voltage | 24 V DC |
| Maximum Current | 2.5 A |
| Duty Cycle | Continuous |
| Rated Performance (MTTF) | 5,000 hours |
| Inlet | Rc1/8 |
| Outlet | Rc1/8 |
| Coil Insulation Class | Class E equivalent (For DC motor) |
| Mounting Dimensions | 166 (L) x 84 (W) mm<br>6 - 17/32" (L) x 3 - 5/16" (W) |
| Weight | 1.6 kg<br>3.5 Lbs |
| Leadwire Length | 285 mm<br>11 - 7/32" |

## Application Examples

Vacuum glass sheet handling equipment

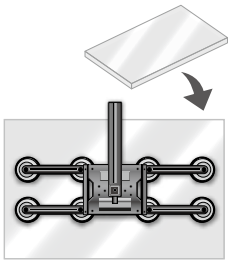

## External Dimensions (Unit: mm)

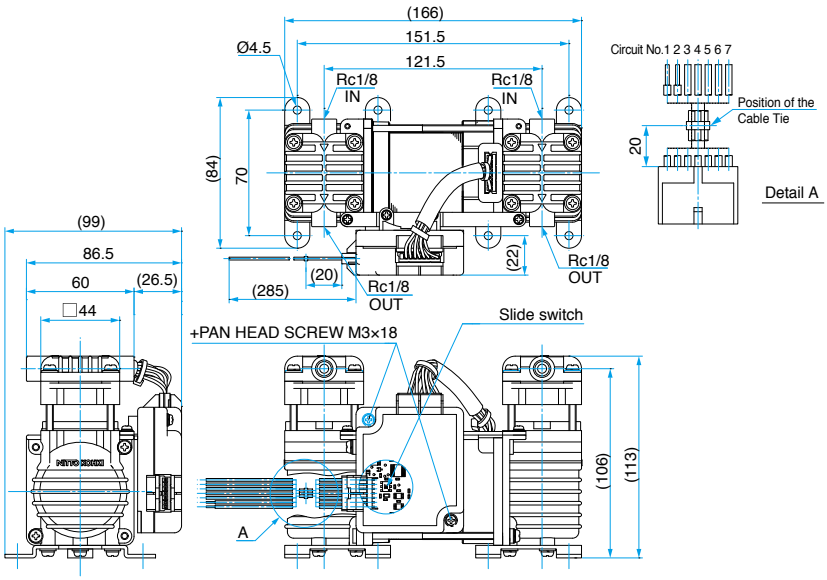


Connection Table

| | | Power Source | | Control Signal | | | | |
|---|---|---|---|---|---|---|---|---|
| Circuit No. | | 1 | 2 | 3 | 4 | 5 | 6 | 7 |
| Cord Color | | Red | Black | Brown | Orange | Yellow | Green | Gray |
| Function | | V+ | V- | DRIVE /FREE | PULSE | ALARM | SPEED | SGND |
| Option | Function Off | ON | | OFF | | | | |
| | Function On | ON | | ON | | | | |
| Cord Size | | AWG20 | | AWG22 | | | | |
| Line Type | | UL1007 | | | | | | |

*Control function is "OFF" by default.

- Be sure to secure the lead wires with a cable tie. (See the detail A.) If they are not secured, poor contact of the connector may occur and result in failure.
- For the details of wiring, please see the user's instructions.

# Compressor

## Model DP0410T-Y2

PWM controllable

Brushless DC Motor 24 V DC

CE 24 V | UKCA 24 V

## Airflow & Power Consumption

### Airflow Characteristics

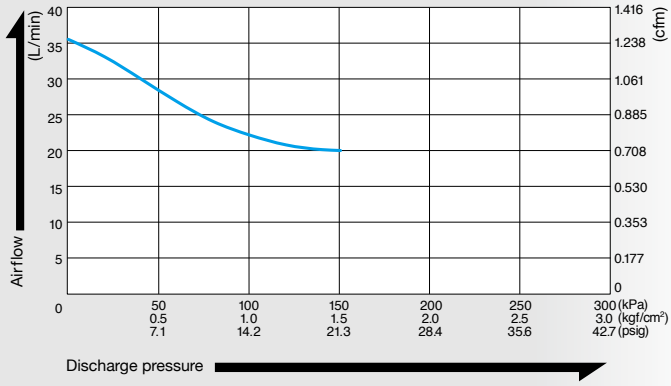


### Current Characteristics

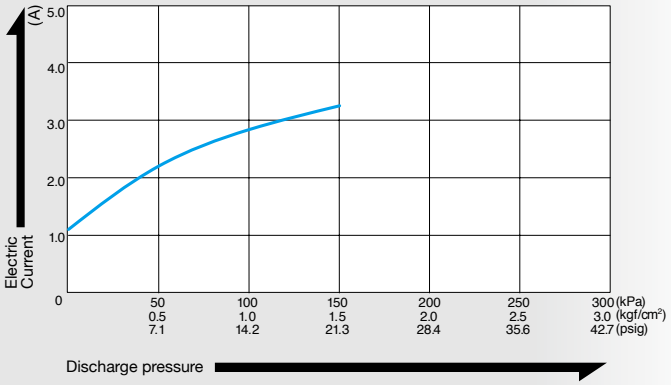


## Specifications

| | |
|---|---|
| Free Air Displacement | 34 L/min<br>1.2 cfm |
| Rated Voltage | 24 V DC |
| Maximum Pressure | 150 kPa (1.5 kgf/cm²)<br>1.5 bar<br>21.3 psig |
| Maximum Current | 4.0 A |
| Duty Cycle | Continuous |
| Working Pressure Range | 0 to 150 kPa<br>(0 to 1.5 kgf/cm²)<br>0 to 1.5 bar<br>0 to 21.3 psig |
| Rated Performance (MTTF) | 5,000 hours |
| Inlet | RC 1/8 |
| Outlet | RC 1/8 |
| Coil Insulation Class | Class E equivalent (For DC motor) |
| Mounting Dimensions | 166 (L) x 84 (W) mm<br>6 - 17/32" (L) x 3 - 5/16" (W) |
| Weight | 1.6 kg<br>3.5 Lbs |
| Leadwire Length | 285 mm<br>11 - 7/32" |

## Application Examples

Air Cylinder/Chuck Driver

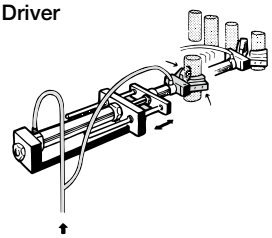

## External Dimensions (Unit: mm)

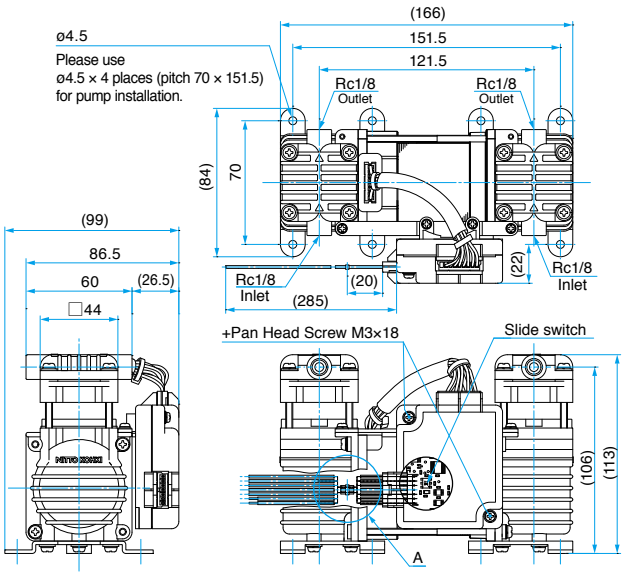


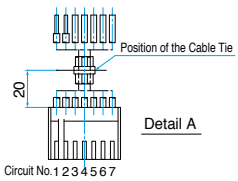


### Connection Table

| | | Power Source | | Control Signal | | | | |
|---|---|---|---|---|---|---|---|---|
| Circuit No. | | 1 | 2 | 3 | 4 | 5 | 6 | 7 |
| Cord Color | | Red | Black | Brown | Orange | Yellow | Green | Gray |
| Function | | V+ | V- | DRIVE/FREE | PULSE | ALARM | SPEED | SGND |
| Option | Function Off | ON | | OFF | | | | |
| | Function On | ON | | ON | | | | |
| Cord Size | | AWG20 | | AWG22 | | | | |
| Line Type | | UL1007 | | | | | | |

*Control function is "OFF" by default.

- Be sure to secure the lead wires with a cable tie. (See the detail A.) If they are not secured, poor contact of the connector may occur and result in failure.
- For the details of wiring, please see the user's instructions.

# Compressor and Vacuum Pump

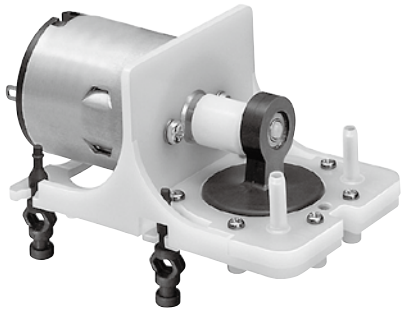

## Model DP0125

CE 12 V | UKCA 12 V

**Brush DC Motor** **12 V DC**

### Airflow & Power Consumption

Airflow Characteristics

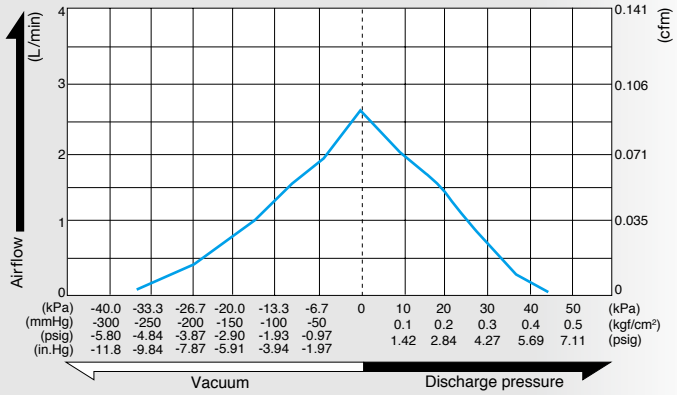


Current Characteristics

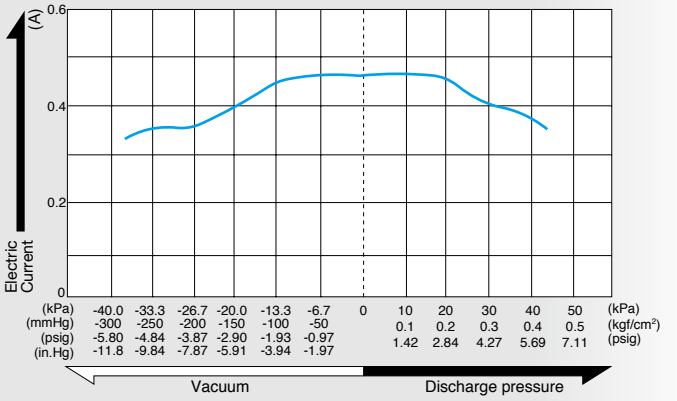


### Specifications

| | |
|---|---|
| Attainable Vacuum | -33.3 kPa (-250 mmHg)<br>-333 mbar<br>- 9.84 in.Hg |
| Free Air Displacement | 2.5 L/min<br>0.088 cfm |
| Rated Voltage | 12 V DC |
| Maximum Pressure | 30 kPa (0.3 kgf/cm²)<br>0.3 bar<br>4.27 psig |
| Maximum Current | 0.5 A |
| Duty Cycle | Continuous |
| Rated Performance (MTTF) | 400 hours |
| Inlet | 3 mm O.D. straight barb |
| Outlet | 3 mm O.D. straight barb |
| Coil Insulation Class | Class E equivalent |
| Mounting Dimensions | 32 (L) x 32.5 (W) mm<br>1 - 17/64" (L) x 1 - 9/32" (W) |
| Weight | 0.08 kg<br>0.18 Lbs |

### Application Examples

**Vacuum Sucking Pen**

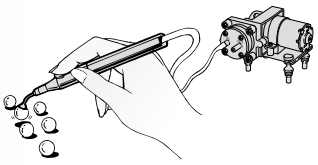

**Blood Pressure Tester**

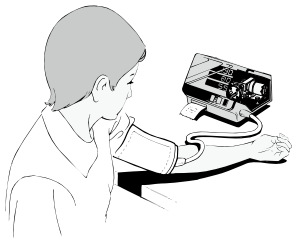

### External Dimensions (Unit: mm)

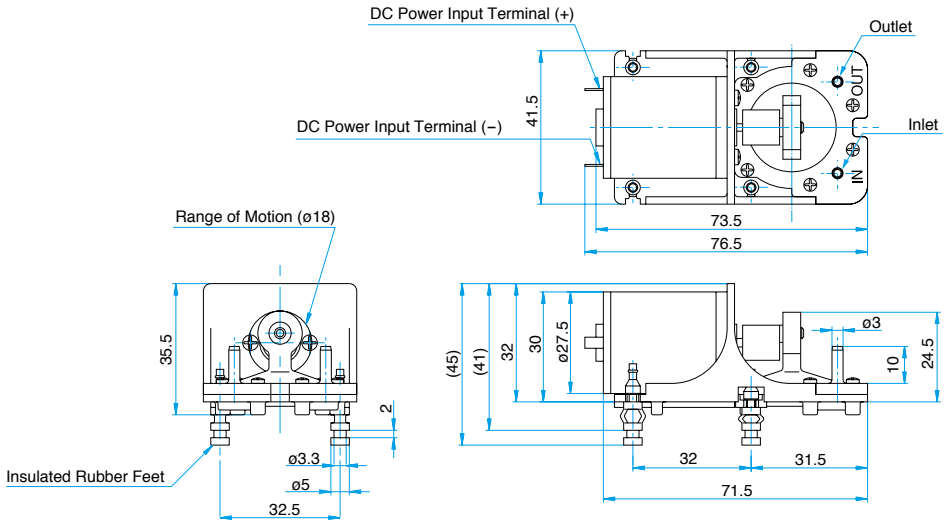

# Compressor and Vacuum Pump

## Model DP0140

CE 12 V | UK CA 12 V

**Brush DC Motor** **12 V DC**

### Airflow & Power Consumption

Airflow Characteristics

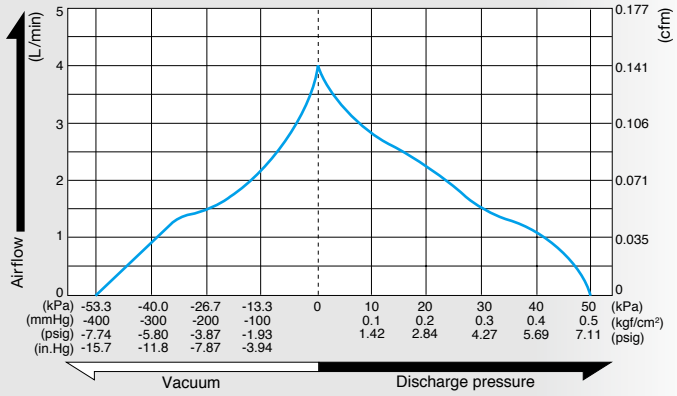


Current Characteristics

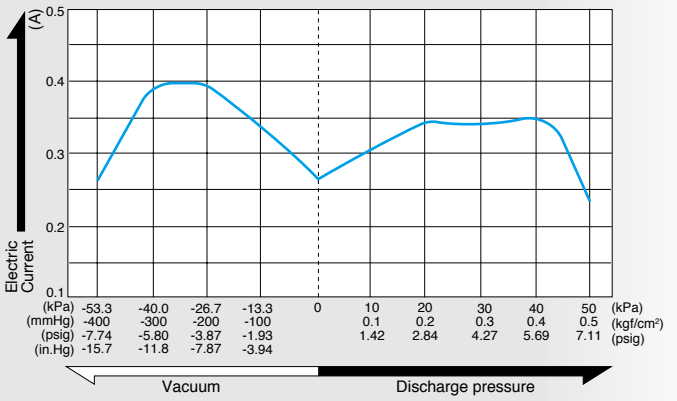


### Specifications

| | |
|---|---|
| Attainable Vacuum | -53.3 kPa (-400 mmHg)<br>-533 mbar<br>-15.7 in.Hg |
| Free Air Displacement | 4.0 L/min<br>0.141 cfm |
| Rated Voltage | 12 V DC |
| Maximum Pressure | 50 kPa (0.5 kgf/cm$^2$)<br>0.5 bar<br>7.11 psig |
| Maximum Current | 0.5 A |
| Duty Cycle | Continuous |
| Rated Performance (MTTF) | 800 hours |
| Inlet | 5 mm O.D. straight barb |
| Outlet | 5 mm O.D. straight barb |
| Coil Insulation Class | Class E equivalent |
| Mounting Dimensions | 52 (L) x 36 (W) mm<br>2 - 3/64" (L) x 1 - 27/64" (W) |
| Weight | 0.19 kg<br>0.42 Lbs |

### Application Examples

**Vacuum Sucking Pen**

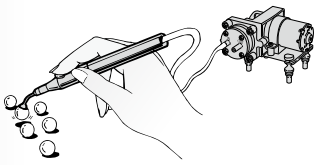

**Blood Pressure Tester**

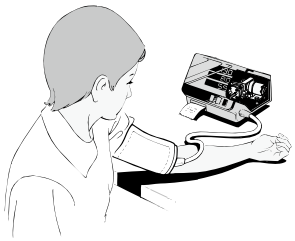

### External Dimensions (Unit: mm)

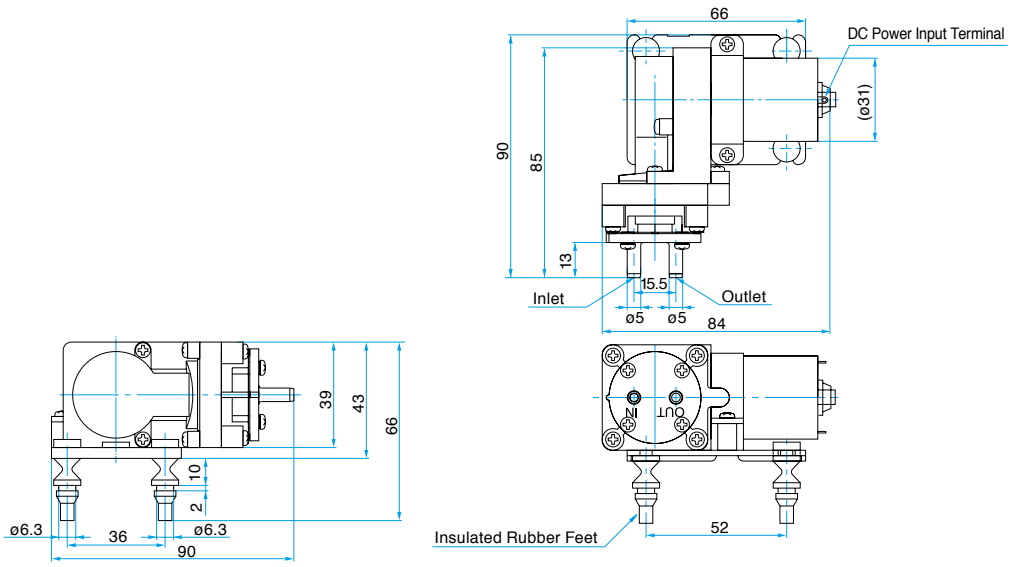

# Compressor and Vacuum Pump

## Model DP0102

CE 12 V | UKCA 12 V

**Brushless DC Motor 12 V DC**

### Airflow & Power Consumption

Airflow Characteristics

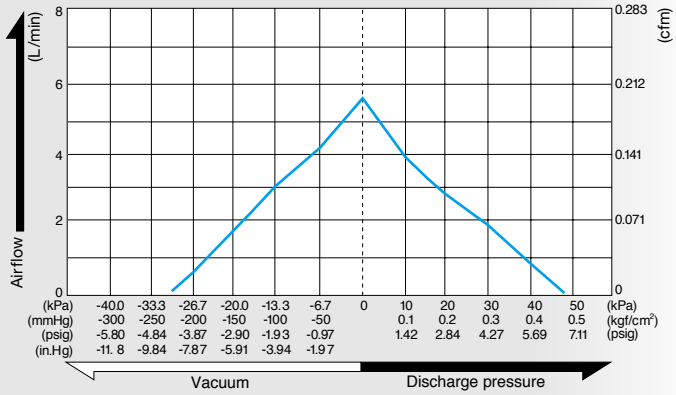


Current Characteristics

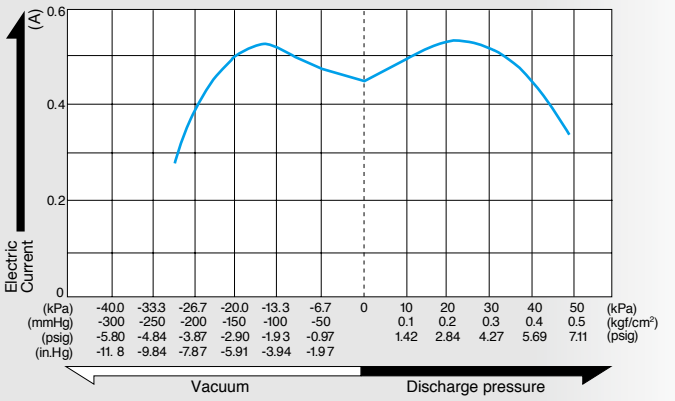


### Specifications

| | |
|---|---|
| Attainable Vacuum | -26.7 kPa (-200 mmHg)<br>-267 mbar<br>-7.87 in.Hg |
| Free Air Displacement | 5.0 L/min<br>0.177 cfm |
| Rated Voltage | 12 V DC |
| Maximum Pressure | 45 kPa (0.45 kgf/cm²)<br>0.45 bar<br>6.4 psig |
| Maximum Current | 0.7 A |
| Duty Cycle | Continuous |
| Working Pressure Range | -26.7 kPa to 45 kPa<br>(-200 mmHg to 0.45 kgf/cm²)<br>-267 mbar to 0.45 bar<br>-7.87 in.Hg to 6.4 psig |
| Rated Performance (MTTF) | 10,000 hours |
| Inlet | 6 mm O.D. straight barb |
| Outlet | 6 mm O.D. straight barb |
| Coil Insulation Class | Class E equivalent |
| Mounting Dimensions | 50 (L) x 30 (W) mm<br>1 - 31/32" (L) x 1 - 3/16" (W) |
| Weight | 0.25 kg<br>0.55 Lbs |
| Leadwire Length | 400 mm<br>15 - 3/4" |

### Application Examples

**Endoscopes**

**Removal of micromachining chips**

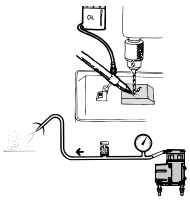

### External Dimensions (Unit: mm)

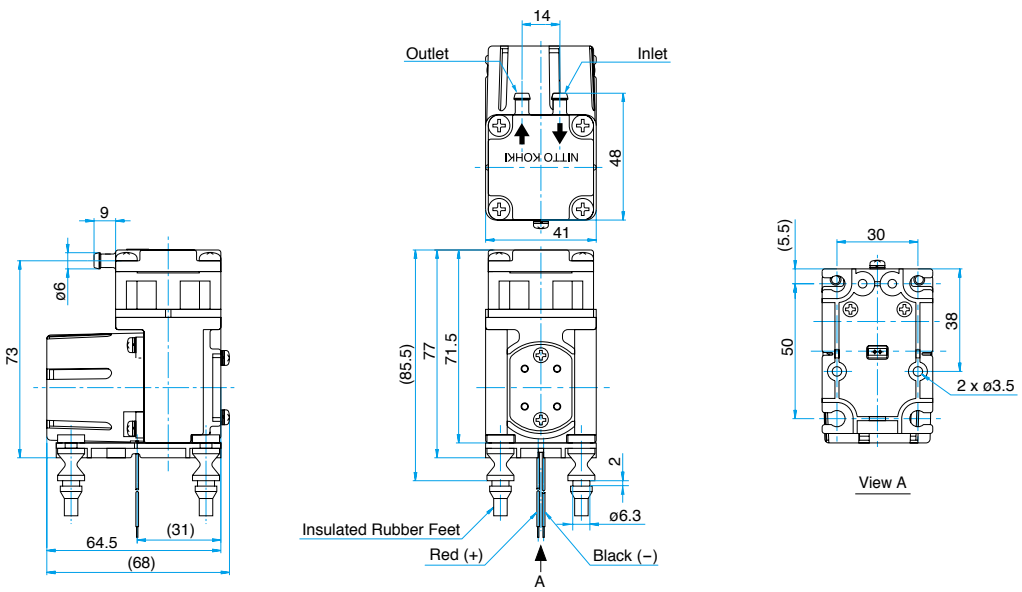

# Compressor and Vacuum Pump

## Model DP0102S

CE 24 V | UK CA 24 V

**Brushless DC Motor 24 V DC**

### Airflow & Power Consumption

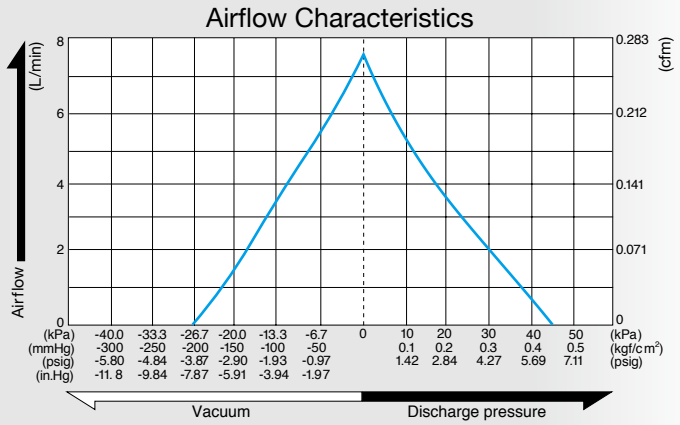


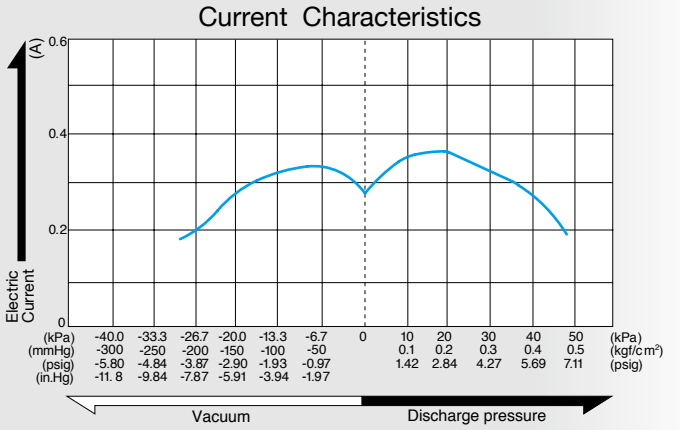


### Specifications

| | |
|---|---|
| Attainable Vacuum | -26.7 kPa (-200 mmHg)<br>-267 mbar<br>-7.87 in.Hg |
| Free Air Displacement | 7.0 L/min<br>0.247 cfm |
| Rated Voltage | 24 V DC |
| Maximum Pressure | 45 kPa (0.45 kgf/cm²)<br>0.45 bar<br>6.4 psig |
| Maximum Current | 0.5 A |
| Duty Cycle | Continuous |
| Working Pressure Range | -26.7 kPa to 45 kPa<br>(-200 mmHg to 0.45 kgf/cm²)<br>-267 mbar to 0.45 bar<br>-7.87 in.Hg to 6.4 psig |
| Rated Performance (MTTF) | 10,000 hours |
| Inlet | 6 mm O.D. straight barb |
| Outlet | 6 mm O.D. straight barb |
| Coil Insulation Class | Class E equivalent |
| Mounting Dimensions | 50 (L) x 30 (W) mm<br>1 - 31/32" (L) x 1 - 3/16" (W) |
| Weight | 0.25 kg<br>0.55 Lbs |
| Leadwire Length | 400 mm<br>15 - 3/4" |

### Application Examples

**Endoscopes**

**Removal of micromachining chips**

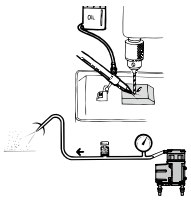

### External Dimensions (Unit: mm)

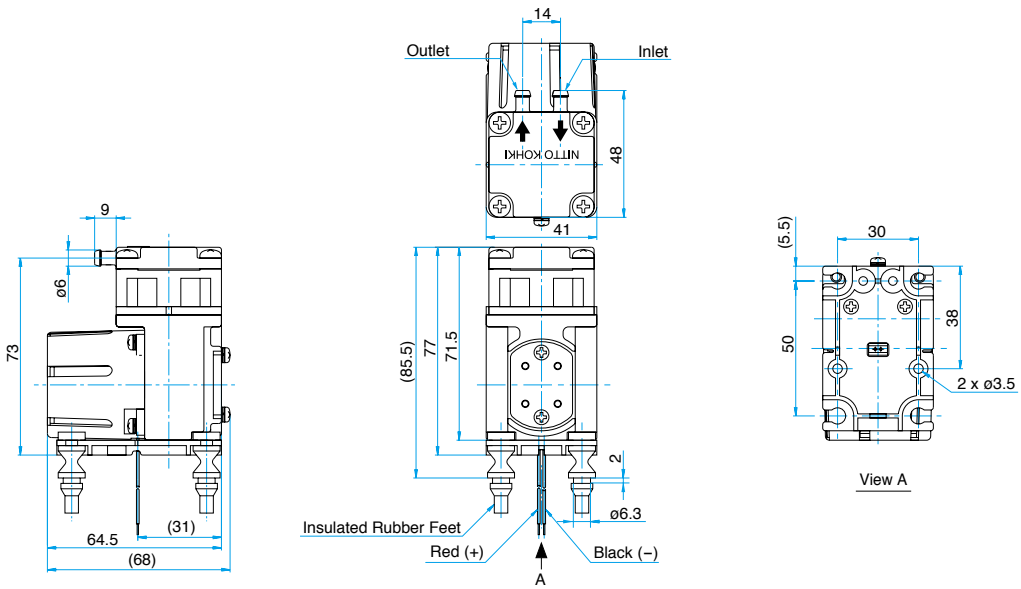

# Compressor and Vacuum Pump

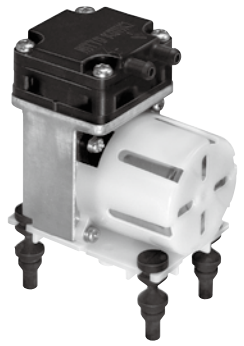

## Model DP0102H-X1

CE 12 V | UKCA 12 V

**Brushless DC Motor** **12 V DC**

### Airflow & Power Consumption

Airflow Characteristics

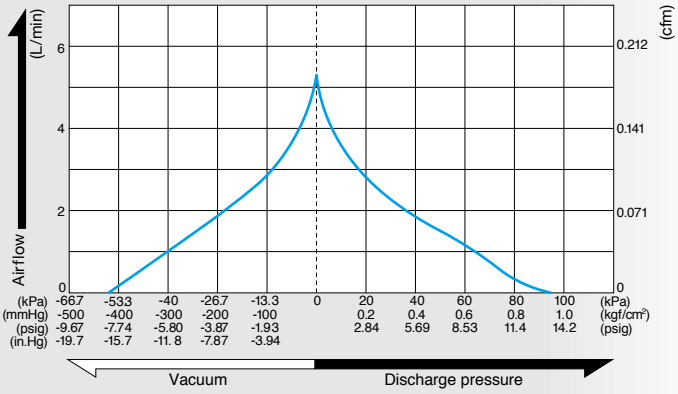


Current Characteristics

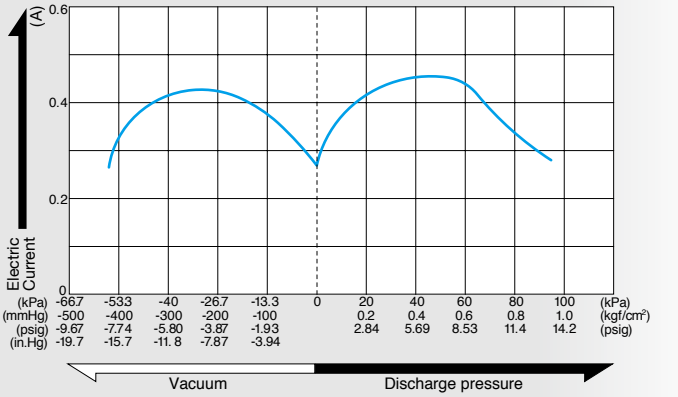


### Specifications

| | |
|---|---|
| Attainable Vacuum | -50.7 kPa (-380 mmHg)<br>-507 mbar<br>-15 in.Hg |
| Free Air Displacement | 4.0 L/min<br>0.141 cfm |
| Rated Voltage | 12 V DC |
| Maximum Pressure | 80 kPa (0.8 kgf/cm²)<br>0.8 bar<br>11.4 psig |
| Maximum Current | 0.7 A |
| Duty Cycle | Continuous |
| Working Pressure Range | -50.7 kPa to 80 kPa<br>(-380 mmHg to 0.8 kgf/cm²)<br>-507 mbar to 0.8 bar<br>-15 in.Hg to 11.4 psig |
| Rated Performance (MTTF) | 8,000 hours |
| Inlet | 6 mm O.D. straight barb |
| Outlet | 6 mm O.D. straight barb |
| Coil Insulation Class | Class E equivalent |
| Mounting Dimensions | 50 (L) x 30 (W) mm<br>1 - 31/32" (L) x 1 - 3/16" (W) |
| Weight | 0.25 kg<br>0.55 Lbs |
| Leadwire Length | 400 mm<br>15 - 3/4" |

### Application Examples

**Vacuum pick up and place devices for CD & DVD**

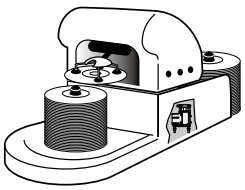

**Removal of micromachining chips**

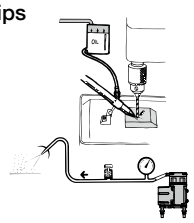

### External Dimensions (Unit: mm)

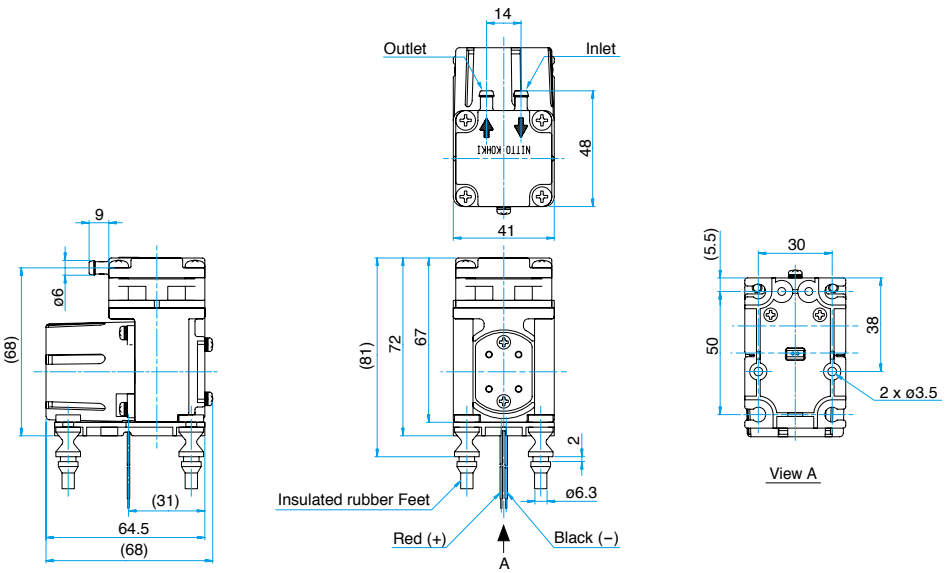

# Compressor

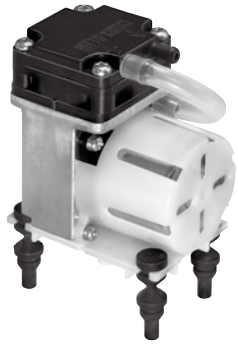

## Model DP0102H-X2

Brushless DC Motor 12 V DC

CE 12 V UKCA 12 V

### Airflow & Power Consumption

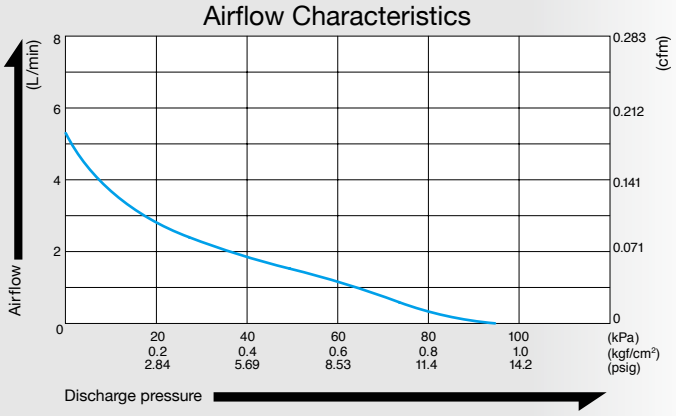


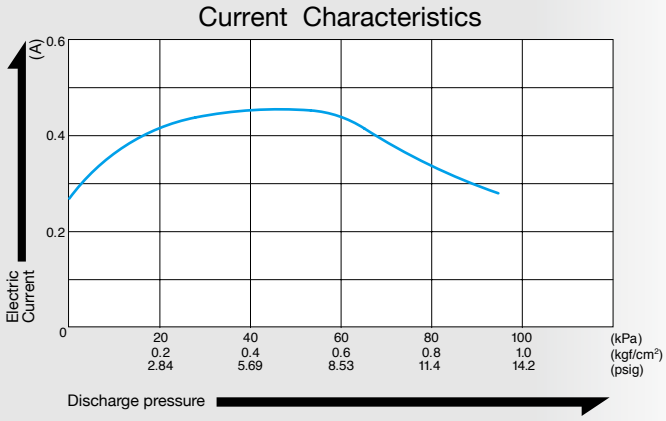


### Specifications

| | |
|---|---|
| Free Air Displacement | 4.0 L/min<br>0.141 cfm |
| Rated Voltage | 12 V DC |
| Maximum Pressure | 80 kPa (0.8 kgf/cm²)<br>0.8 bar<br>11.4 psig |
| Maximum Current | 0.7 A |
| Duty Cycle | Continuous |
| Working Pressure Range | 0 to 80 kPa<br>(0 to 0.8 kgf/cm²)<br>0 to 0.8 bar<br>0 to 11.4 psig |
| Rated Performance (MTTF) | 8,000 hours |
| Inlet | 6 mm O.D. straight barb |
| Outlet | 6 mm O.D. straight barb |
| Coil Insulation Class | Class E equivalent |
| Mounting Dimensions | 50 (L) x 30 (W) mm<br>1 - 31/32" (L) x 1 - 3/16" (W) |
| Weight | 0.25 kg<br>0.55 Lbs |
| Leadwire Length | 400 mm<br>15 - 3/4" |

### Application Examples

Removal of micromachining chips

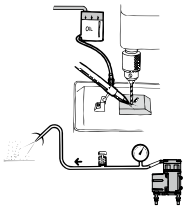

### External Dimensions (Unit: mm)

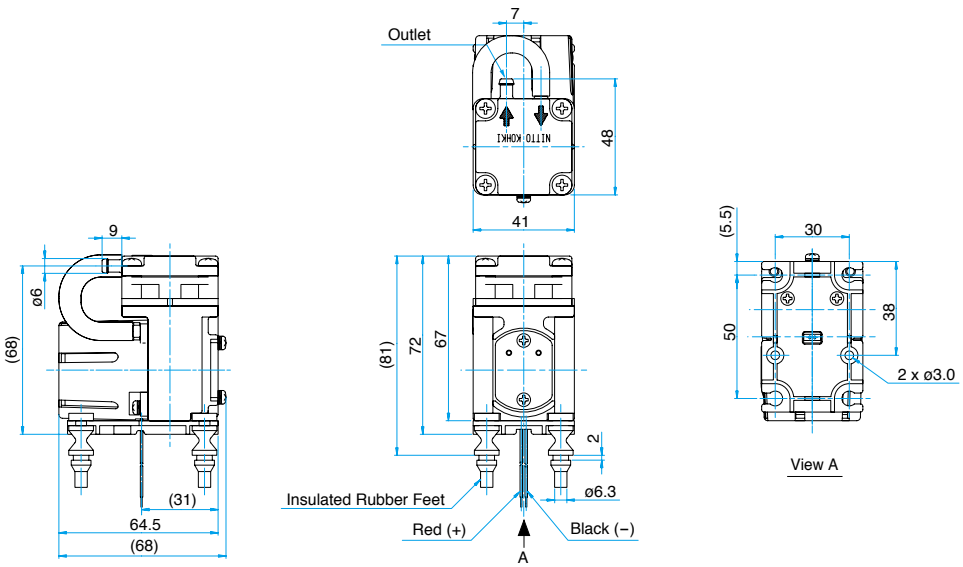

# Compressor and Vacuum Pump

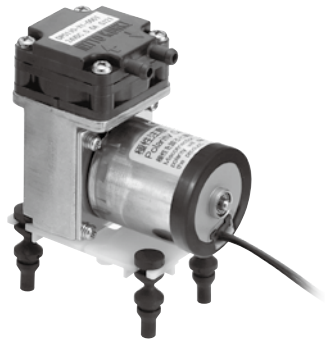

## Model DP0110-X1

CE 12 V | UKCA 12 V

**Brushless DC Motor** **12 V DC**

### Airflow & Power Consumption

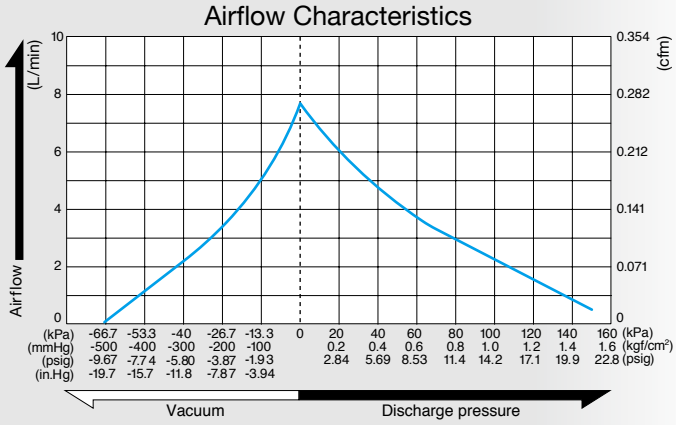


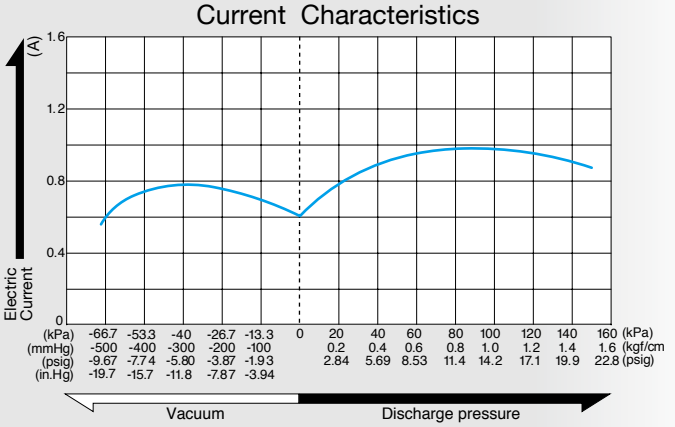


### Specifications

| | |
|---|---|
| Attainable Vacuum | -66.7 kPa (-500 mmHg)<br>-667 mbar<br>-19.7 in.Hg |
| Free Air Displacement | 7.5 L/min<br>0.265 cfm |
| Rated Voltage | 12 V DC |
| Maximum Pressure | 150 kPa (1.5 kgf/cm²)<br>1.5 bar<br>21.3 psig |
| Maximum Current | 1.2 A or less |
| Duty Cycle | Continuous |
| Rated Performance (MTTF) | 8,000 hours |
| Inlet | 6 mm O.D. straight barb |
| Outlet | 6 mm O.D. straight barb |
| Coil Insulation Class | Class A equivalent |
| Mounting Dimensions | 50 (L) x 30 (W) mm<br>1 - 31/32" (L) x 1 - 3/16" (W) |
| Weight | 0.30 kg<br>0.66 Lbs |
| Leadwire Length | 360 mm<br>14 - 11/64" |

### Application Examples

**Vacuum pick up and place devices for CD & DVD**

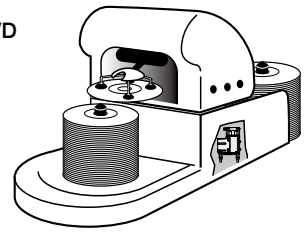

### External Dimensions (Unit: mm)

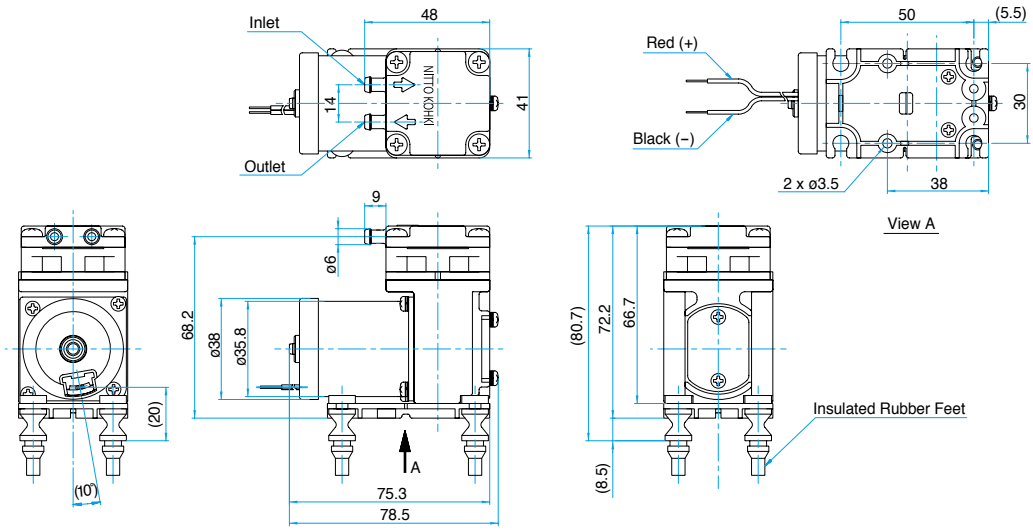

# Compressor and Vacuum Pump

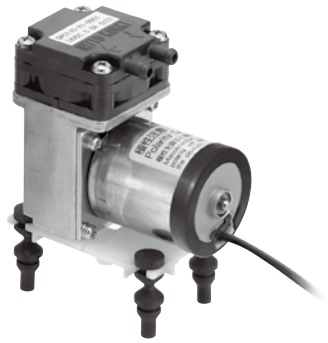

## Model DP0110-Y1

CE 24 V | UKCA 24 V

**Brushless DC Motor** **24 V DC**

### Airflow & Power Consumption

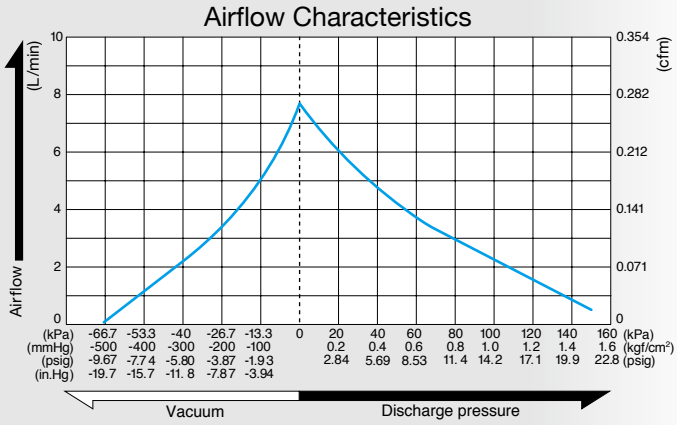


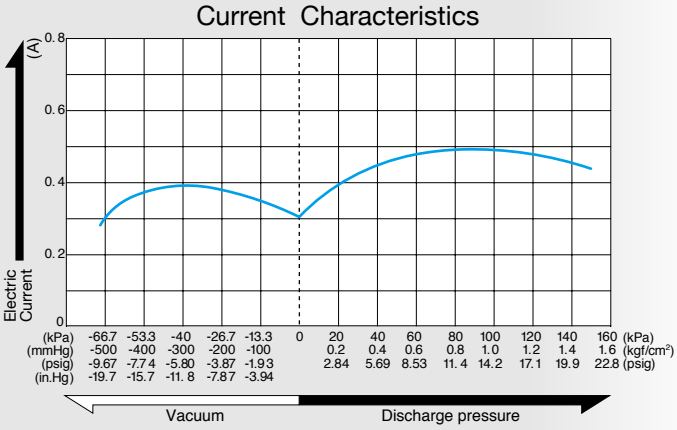


### Specifications

| | |
|---|---|
| Attainable Vacuum | -66.7 kPa (-500 mmHg)<br>-667 mbar<br>-19.7 in.Hg |
| Free Air Displacement | 7.5 L/min<br>0.265 cfm |
| Rated Voltage | 24 V DC |
| Maximum Pressure | 150 kPa (1.5 kgf/cm²)<br>1.5 bar<br>21.3 psig |
| Maximum Current | 0.6 A or less |
| Duty Cycle | Continuous |
| Rated Performance (MTTF) | 8,000 hours |
| Inlet | 6 mm O.D. straight barb |
| Outlet | 6 mm O.D. straight barb |
| Coil Insulation Class | Class A equivalent |
| Mounting Dimensions | 50 (L) x 30 (W) mm<br>1 - 31/32" (L) x 1 - 3/16" (W) |
| Weight | 0.30 kg<br>0.66 Lbs |
| Leadwire Length | 360 mm<br>14 - 11/64" |

### Application Examples

Vacuum pick up and place devices for CD & DVD

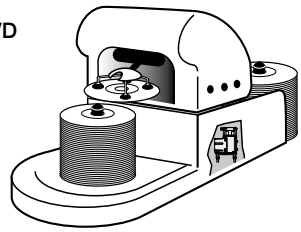

### External Dimensions (Unit: mm)

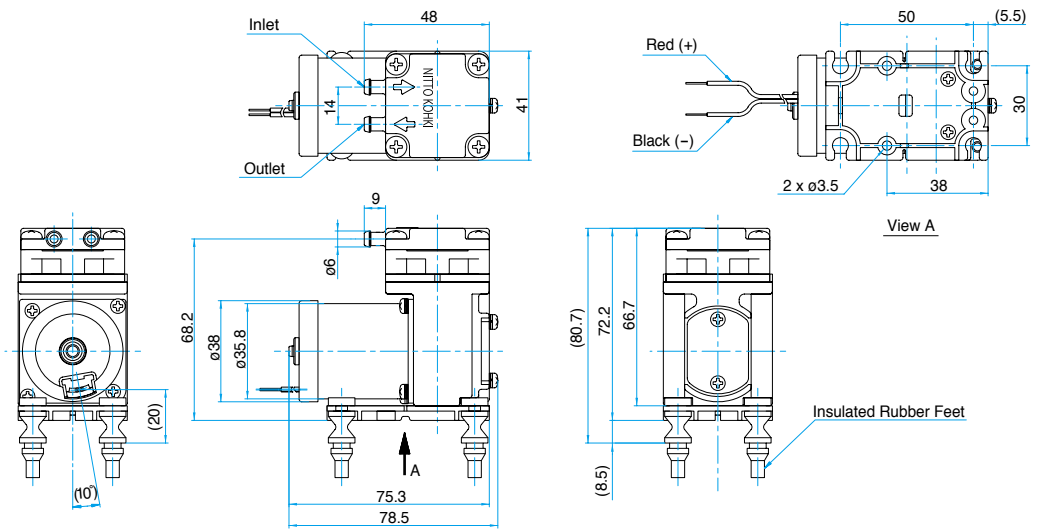

# Compressor and Vacuum Pump

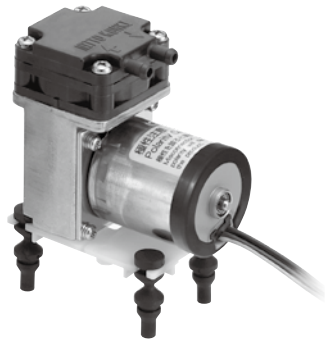

## Model DP0110-X3

PWM controlled model

Brushless DC Motor 12 V DC

CE 12 V UKCA 12 V

## Airflow & Power Consumption

### Airflow Characteristics

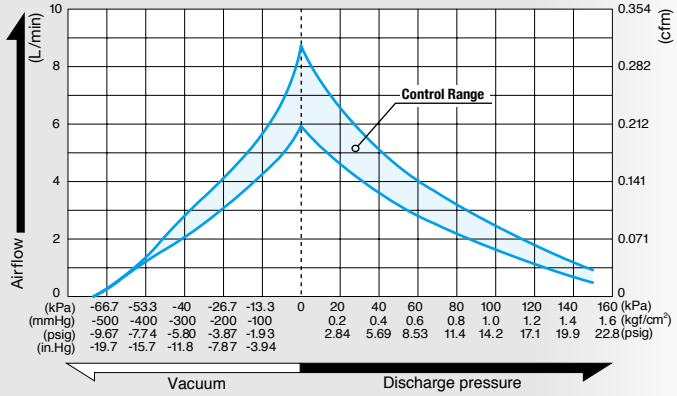


### Current Characteristics

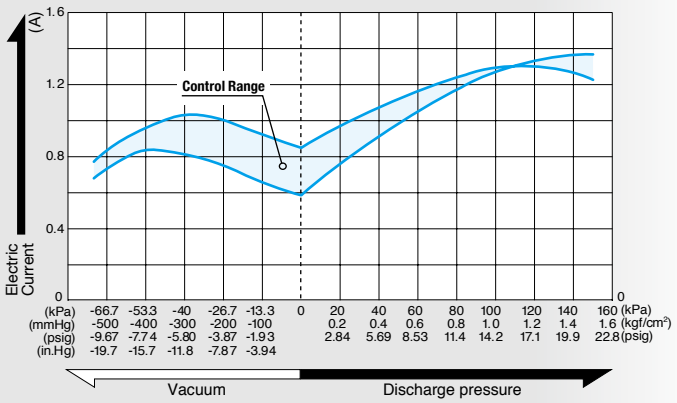


## Specifications

| | |
|---|---|
| Attainable Vacuum | -66.7 kPa (-500 mmHg)<br>-667 mbar<br>-19.7 in.Hg |
| Free Air Displacement | 7.5 L/min<br>0.265 cfm |
| Rated Voltage | 12 V DC |
| Maximum Pressure | 150 kPa (1.5 kgf/cm²)<br>1.5 bar<br>21.3 psig |
| Maximum Current | 1.4 A or less |
| Duty Cycle | Continuous |
| Rated Performance (MTTF) | 8,000 hours |
| Control(PWM) | 2.5 - 5 V, 15 - 25 kHz, Duty cycle 80 - 100% |
| Inlet | 6 mm O.D. straight barb |
| Outlet | 6 mm O.D. straight barb |
| Coil Insulation Class | Class A equivalent |
| Mounting Dimensions | 50 (L) x 30 (W) mm<br>1 - 31/32" (L) x 1 - 3/16" (W) |
| Weight | 0.30 kg<br>0.66 Lbs |
| Leadwire Length | 180 mm<br>7 - 3/32" |

## Application Examples

Vacuum pick up and place devices for CD & DVD

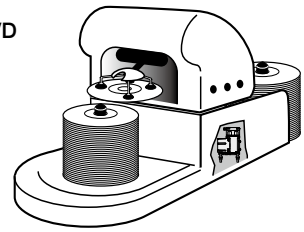

## External Dimensions (Unit: mm)

**Mounting Dimension of Rubber Foot:**
Plate thickness : t = 2 mm,
Hole diameter : ø6±0.1 mm
(Rubber feet come with the product as accessories.)

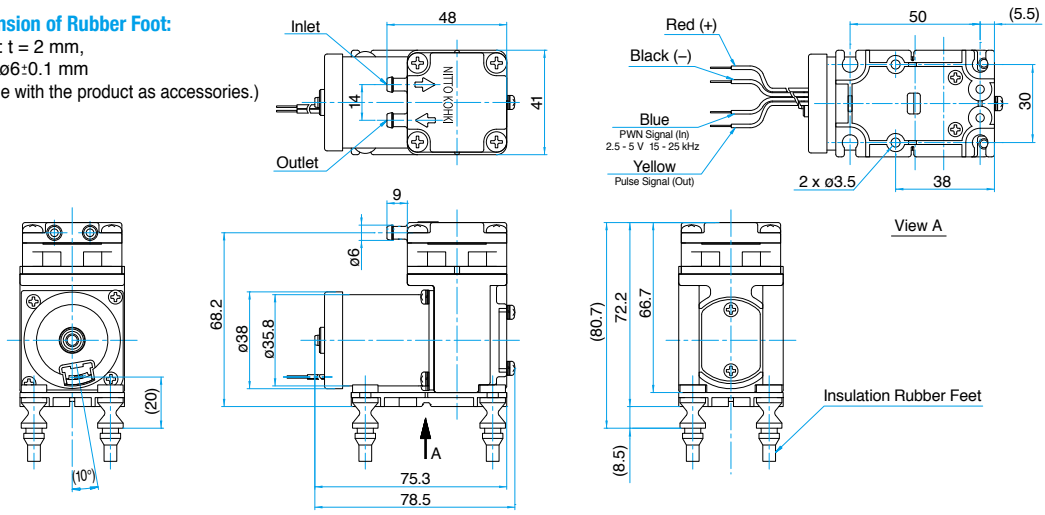

# Compressor and Vacuum Pump

## Model DP0110T-X1

**Brushless DC Motor** **12 V DC**

CE 12 V | UK CA 12 V

### Airflow & Power Consumption

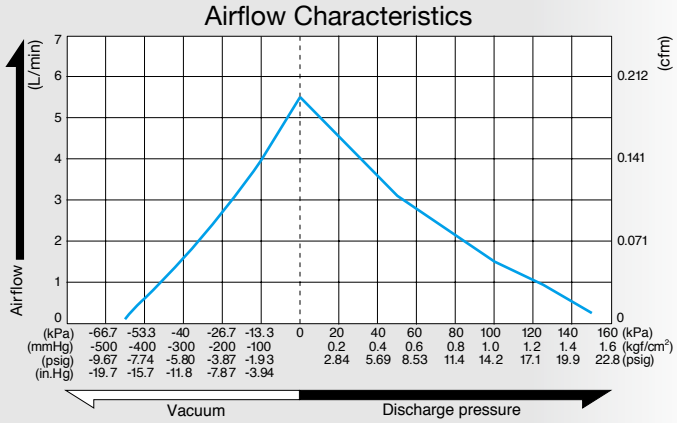


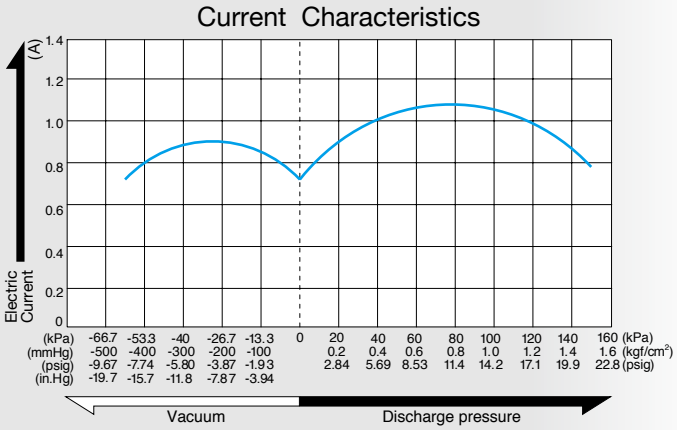


### Specifications

| | |
|---|---|
| Attainable Vacuum | -60.0 kPa (-450 mmHg)<br>-600 mbar<br>-17.7 in.Hg |
| Free Air Displacement | 5.5 L/min<br>0.194 cfm |
| Rated Voltage | 12 V DC |
| Maximum Pressure | 150 kPa (1.5 kgf/cm²)<br>1.5 bar<br>21.3 psig |
| Maximum Current | 1.2 A |
| Duty Cycle | Continuous |
| Rated Performance (MTTF) | 5,000 hours |
| Inlet | 6.8 mm O.D. straight barb |
| Outlet | 6.8 mm O.D. straight barb |
| Coil Insulation Class | Class A equivalent |
| Mounting Dimensions | 36.5 (L) x 37.5 (W) mm<br>1 - 7/16" (L) x 1 - 15/32" (W) |
| Weight | 0.27 kg<br>0.60 Lbs |
| Leadwire Length | 360 mm<br>14 - 11/64" |

### Application Examples

**Vending Machines**

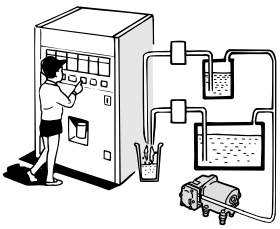

### External Dimensions (Unit: mm)

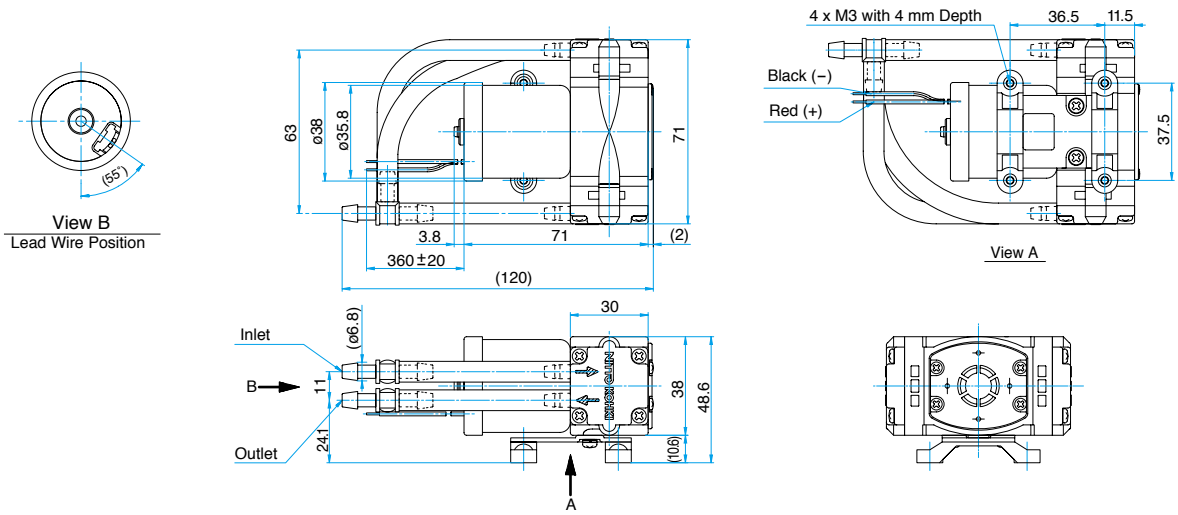

# Compressor and Vacuum Pump

## Model DP0110T-Y1

CE 24 V | UKCA 24 V

**Brushless DC Motor** **24 V DC**

### Airflow & Power Consumption

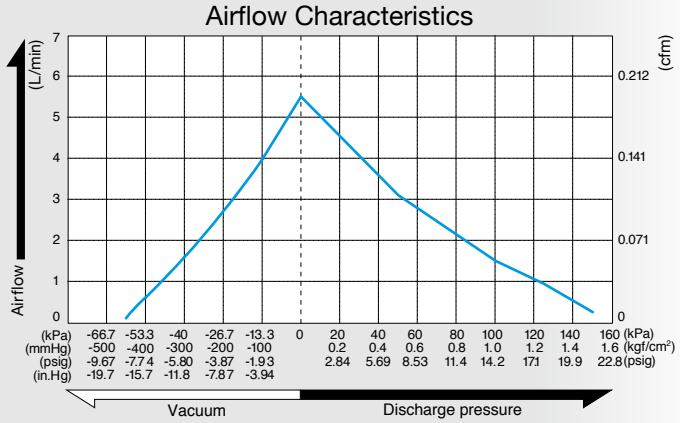


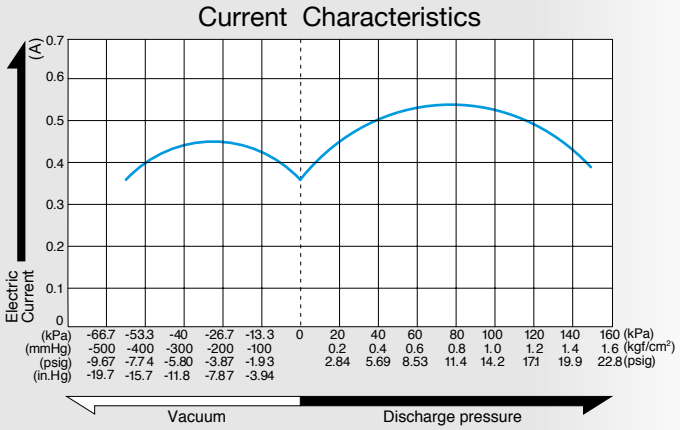


### Specifications

| | |
|---|---|
| Attainable Vacuum | -60.0 kPa (-450 mmHg)<br>-600 mbar<br>-17.7 in.Hg |
| Free Air Displacement | 5.5 L/min<br>0.194 cfm |
| Rated Voltage | 24 V DC |
| Maximum Pressure | 150 kPa (1.5 kgf/cm²)<br>1.5 bar<br>21.3 psig |
| Maximum Current | 0.6 A |
| Duty Cycle | Continuous |
| Rated Performance (MTTF) | 5,000 hours |
| Inlet | 6.8 mm O.D. straight barb |
| Outlet | 6.8 mm O.D. straight barb |
| Coil Insulation Class | Class A equivalent |
| Mounting Dimensions | 36.5 (L) x 37.5 (W) mm<br>1 - 7/16" (L) x 1 - 15/32" (W) |
| Weight | 0.27 kg<br>0.60 Lbs |
| Leadwire Length | 360 mm<br>14 - 11/64" |

### Application Examples

**Vending Machines**

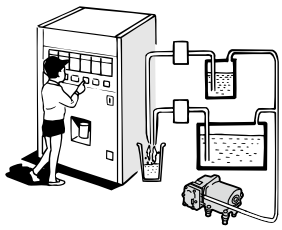

### External Dimensions (Unit: mm)

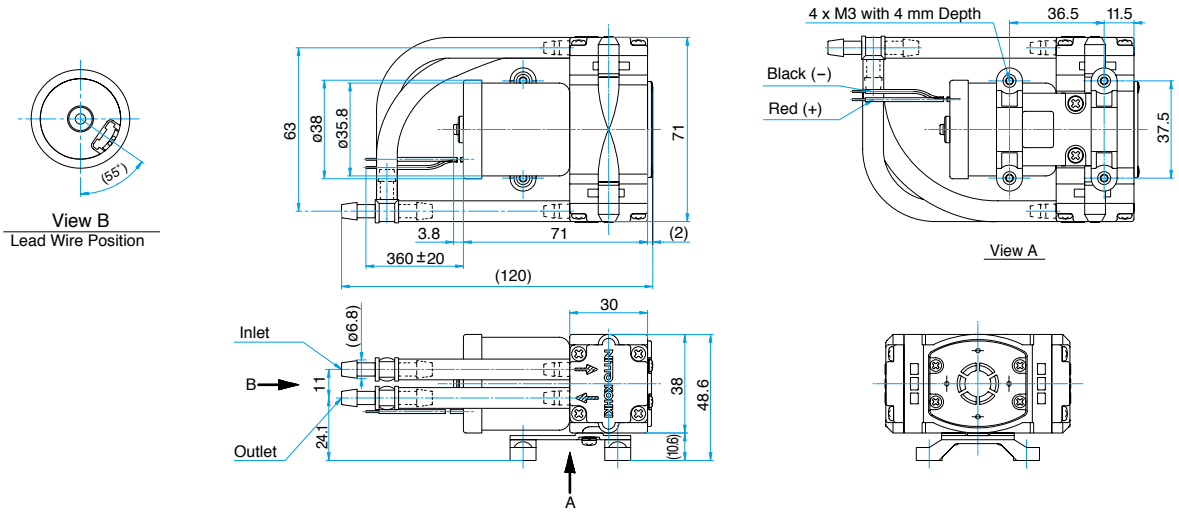

# Compressor and Vacuum Pump

## Model DP0210TA-Y1

PWM controllable

Brushless DC Motor 24 V DC

CE 24 V UKCA 24 V

## Airflow & Power Consumption

### Airflow Characteristics

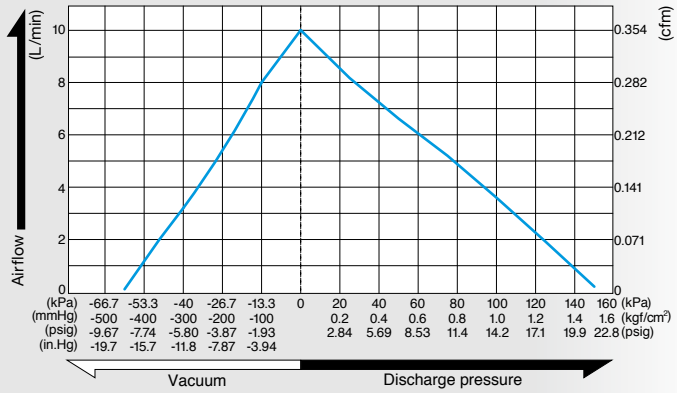


### Current Characteristics

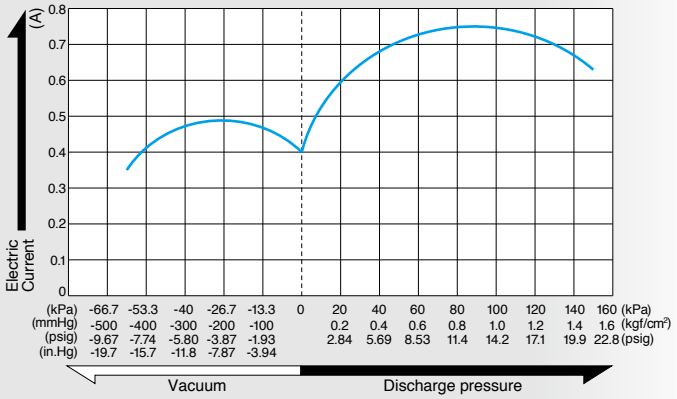


## Specifications

| | |
|---|---|
| Attainable Vacuum | -60.0 kPa (-450 mmHg)<br>-600 mbar<br>-17.7 in.Hg |
| Free Air Displacement | 10 L/min<br>0.35 cfm |
| Rated Voltage | 24 V DC |
| Maximum Pressure | 150 kPa (1.5 kgf/cm²)<br>1.5 bar<br>21.3 psig |
| Maximum Current | 0.8 A |
| Duty Cycle | Continuous |
| Rated Performance (MTTF) | 5,000 hours |
| Inlet | 6.8 mm O.D. straight barb |
| Outlet | 6.8 mm O.D. straight barb |
| Coil Insulation Class | Class B equivalent |
| Mounting Dimensions | 36.5 (L) x 37.5 (W) mm<br>1 - 7/16" (L) x 1 - 15/32" (W) |
| Weight | 0.32 kg<br>0.71 Lbs |
| Leadwire Length | 300 mm<br>11 - 13/16" |

## Application Examples

Vending Machines

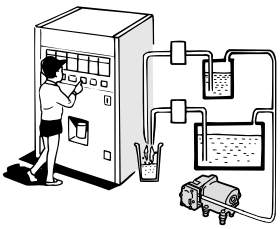

## External Dimensions (Unit: mm)

Connection Table

| Circuit No. | 1 | 2 | 3 | 4 | 5 | 6 | 7 | 8 |
|---|---|---|---|---|---|---|---|---|
| Cord Color | — | Yellow | — | — | White | Blue | Black | Red |
| Connection Table | Control Signal | | | | | | Power Source | |
| Function | — | FG | — | — | PWM | BRAKE | GND | VM |
| Cord Size | AWG28 | | | | | | AWG26 | |
| Cord UL Style | UL1571 | | | | | | | |

No control function

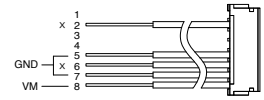


Use control function

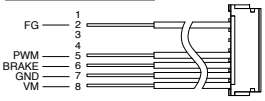


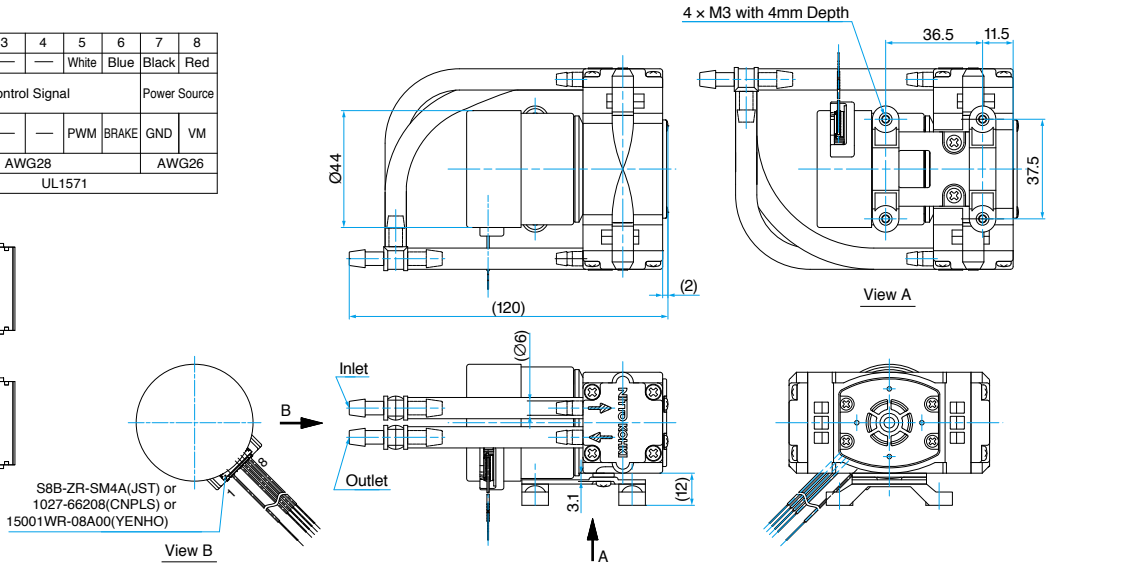

# LIQUID PUMP

## Piezoelectric Pump

### BIMOR series

Page

BPS Type
BPH Type
BPHS Type
BPF Type — 87

Made to order model — 110

## DC Diaphragm Liquid Pump

### DPE series

DPE-100
DPE-400
DPE-400BL
DPE-800 — 89

DPE-100BLC
DPE-200BLC — 91

**Liquid Pump series (120 V/240 V AC/DC)**

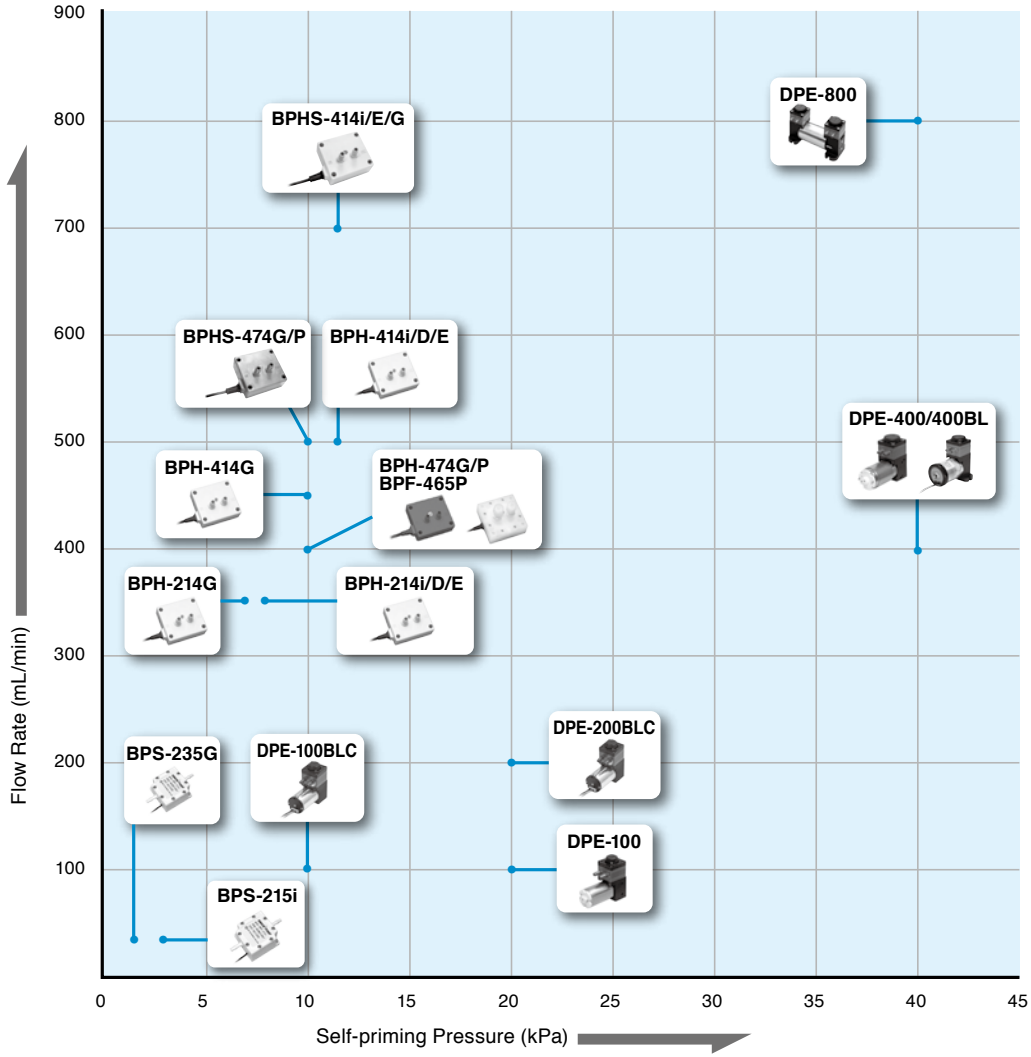


i : Butyl Rubber
G : Fluorine Rubber
D : Dimethyl rubber
E : Ethylene Propylene Rubber
P : Perfluor

# BIMOR PUMP

120 V/240 V 120 V/240 V

## Suitable for pumping liquids

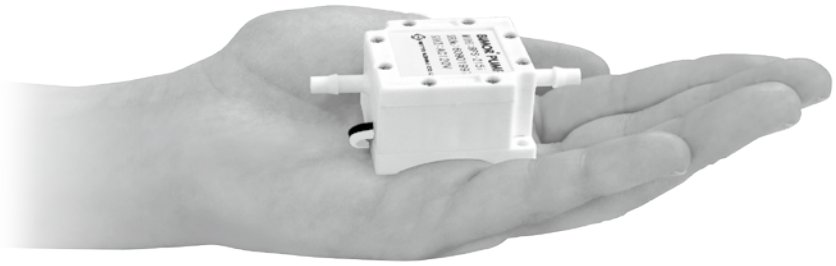

### Applications

- For water supply and drainage
- For cooling water circulation
- For chemical injection
- For liquid sampling

### Compact, lightweight, durable & quiet

As BIMOR PUMP has no motors or shafts or other troublesome mechanisms, we have achieved maintenance free continuous operation for 60 months.

### Low power consumption & electromagnetic noise

BIMOR PUMP is driven by low energy consuming piezoelectric elements. Consequently it costs very little to run and emits virtually no electromagnetic noise.

### Simple flow rate adjustment

As the flow rate of BIMOR PUMP is proportional to the voltage and frequency, adjusting the flow rate is as simple as adjusting either one. You may use the product at the rated voltage or lower.

### Application versatility

The parts can be made of several different materials, so you can select the material appropriate to your needs, be it a liquid application. BIMOR PUMP is currently employed in a variety of different fields including medicine, scientific research, and the PC and chemical industries.

### Principle / Structure

BIMOR PUMP uses the displacement operation of the piezoelectric bimorph vibrator as the direct source of the pumping action.

**Driving Power : Piezoelectric Bimorph Bending**

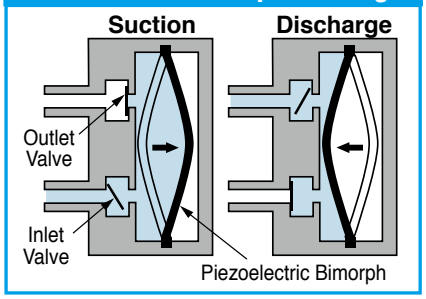


## External Dimensions (Unit: mm)

### BPS type

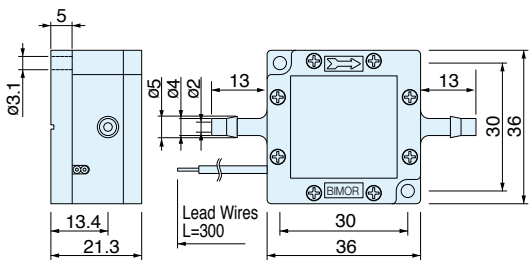


### BPHS type

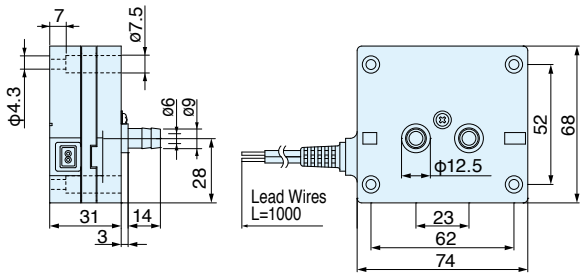


### BPH type

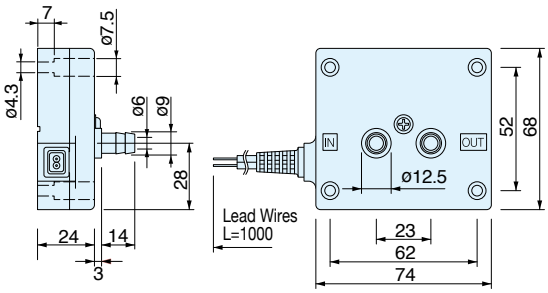


### BPF type

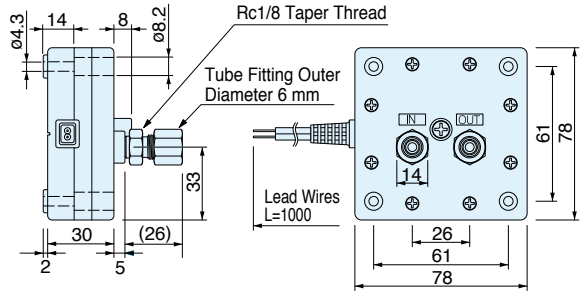

# Specifications

| Voltage(AC)—120 V *1 | | | | | Voltage(AC)—240 V *1 | | | | | Material of Wetted Parts | | | |
|---|---|---|---|---|---|---|---|---|---|---|---|---|---|
| Model | Current (mA) | Self-priming Pressure (kPa)*2 | Flow Rate (mL/min)*2 | Discharge Pressure (kPa) | Model | Current (mA) | Self-priming Pressure (kPa)*2 | Flow Rate (mL/min)*2 | Discharge Pressure (kPa) | Housing | Liquid Contact Sheet | Valve / O-ring | Weight (g) |
| BPS-215i | 3 | 3 | 30 | 15 | — | — | — | — | — | PP | PP | IIR | 40 |
| BPH-214E | 15 | 8 | 350 | 18 | BPH-214E | 7.5 | 8 | 350 | 18 | PP | PP | EPDM | 140 |
| BPH-214G | 15 | 7 | 350 | 17 | BPH-214G | 7.5 | 7 | 350 | 17 | PP | PTFE | FKM | 140 |
| BPH-414E | 30 | 12 | 500 | 35 | — | — | — | — | — | PP | PP | EPDM | 140 |
| — | — | — | — | — | BPH-474G | 15 | 10 | 400 | 35 | PPS | PTFE | FKM | 170 |
| — | — | — | — | — | BPH-474P | 15 | 10 | 400 | 35 | PPS | PTFE | FFKM/FEP | 170 |

*1: The above performance is obtained by using 25°C water at AC frequency 60 Hz. When the pump is used at AC frequency 50 Hz, the flow rate will decrease approximately 20%.
*2: When the liquid temperature is low, the check valve will harden. As a result, the flow rate and the self-priming pressure will decrease. Especially the flow rate of the pump with fluorine rubber will decrease by half at 5°C, so select with sufficient margin. Since the flow rate will decrease with highly viscous liquids, please check the flow rate with an actual pump before use.
*3: Please see page 110 for other made-to-order models.

# Condition of Use

| | |
|---|---|
| Ambient temperature | 5 to 50°C*1 |
| Ambient humidity | 35 to 85%*2 |
| Fluid temperature | 5 to 50°C |

*1: No Freezing
*2: No condensation

BPS Type

BPH Type

# The meaning of each letter in the model name

BP H - 4 1 4 D

**Pump type**
S : Small type
H : Dismantlable type
F : Chemical-resistant type
HS : High flow type

**Diaphragm type**
2: Single
4: Double

**Housing material**
1: Polypropylene (PP)
2: Polyacetal (POM)
6: Fluororesin (Perfluoroalkoxy) (PFA)
7: Polyphenylene Sulfide (PPS)

**Pump type**
4: Dismantlable type
5: Chemical-resistant type and small type

**Rubber material (Valve, O-ring)**
i : Butyl Rubber (IIR)
D : Dimethyl Silicon Rubber (VMQ)
E : Ethylene Propylene Rubber (EPDM)
G : Fluorine Rubber (FKM)
P : Perfluoroelastomer (FFKM)

## Material Description

**EPDM**
Ethylene Propylene Rubber
**FEP**
Fluoroethylene Propylene
**FFKM**
Perfluoroelastomer
**FKM**
Fluorine Rubber
**IIR**
Butyl Rubber
**PP**
Polypropylene
**PPS**
Polyphenylene Sulfide
**PTFE**
Tetrafluororesin
(Polytetrafluoroethylene)

# Suitable/unsuitable chemical liquids

| Model | Examples of suitable chemical liquids | Examples of unsuitable chemical liquids |
|---|---|---|
| BPS-215i | Ethanol, Dilute hydrochloric acid, Sodium carbonate, Benzaldehyde, Formalin | Xylene, Mineral oil, Carbon tetrachloride, Trichloroethylene, Toluene, Benzene |
| BPH-214E<br>BPH-414E | Ammonia water, Ethanol, Dilute hydrochloric acid, Caustic potash, Caustic soda, Methanol | |
| BPH-214G | Ethanol, Hydrogen peroxide, Mineral oil, Sodium hypochlorite | Acetone, Ammonia water, Glacial acetic acid, Hydrofluoric acid, Formalin |
| BPH-474G | Ethanol, Xylene, Carbon tetrachloride, Silicone oil, Trichloroethylene | Acetone, Ammonia water, Chlorosulfonic acid, Glacial acetic acid, Hydrofluoric acid, Formalin |
| BPH-474P | Ethanol, Chloroform, Glacial acetic acid, Benzene, Methyl ethyl ketone | Chlorosulfonic acid, Fluorine oil, CFC 112, CFC 113 |

*This chart is for reference only. Please confirm under the operating conditions before use.

# DC Liquid Pump

## Model DPE-100 / DPE-400 / DPE-400BL / DPE-800

CE 12 V/24 V | UKCA 12 V/24 V

**Brush DC Motor / Brushless DC Motor**

**12 V / 24 V DC**

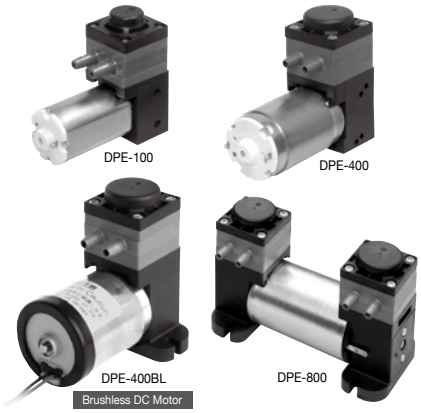


### Flow & Electric Current

Flow Characteristics (Water at 25˚C)

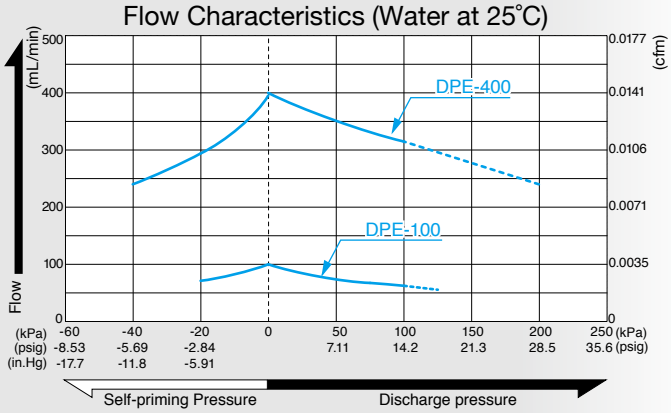


Flow Characteristics (Water at 25˚C)

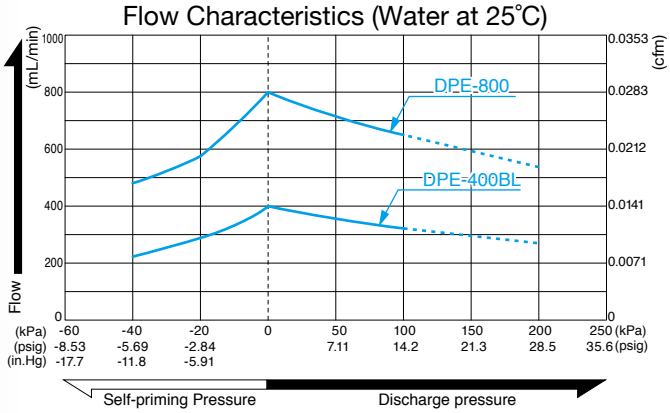


Current Characteristics

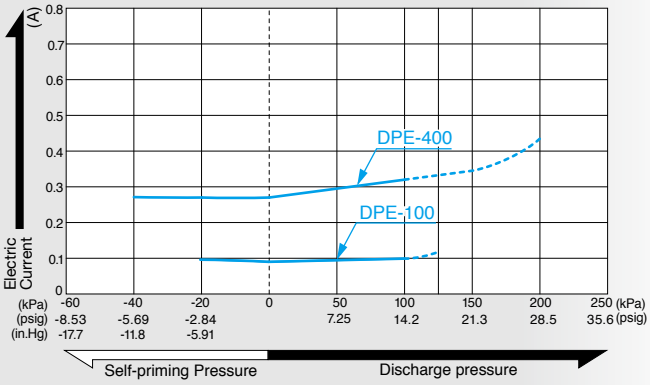


Current Characteristics

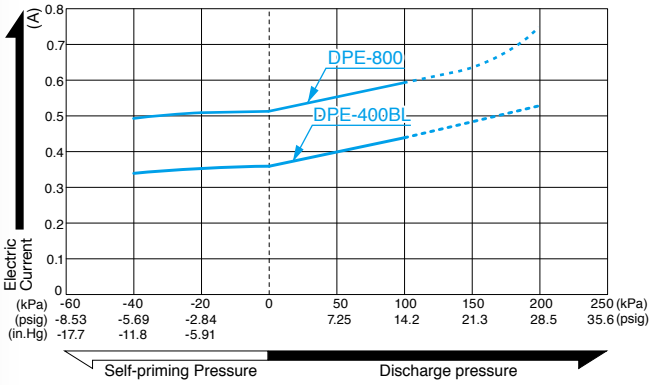


### Specifications

| Model | DPE-100 | DPE-400 | DPE-400BL-X1 | DPE-400BL-Y1 | DPE-800 |
|---|---|---|---|---|---|
| Rated Voltage | 24 V DC | | 12 V DC | 24 V DC | |
| Flow Rate *1 | 100 mL/min<br>0.0035 cfm | 400 mL/min<br>0.0141 cfm | | | 800 mL/min<br>0.0283 cfm |
| Working Pressure Range | 0 to 100 kPa<br>0 to 1 bar<br>0 to 14.2 psig | | | | |
| Maximum Pressure *2 | 300 kPa<br>3 bar<br>42.7 psig | | | | |
| Maximum Current | 100 mA | 345 mA | 900 mA | 450 mA | 600 mA |
| Duty Cycle | Continuous | | | | |
| Rated Performance (MTTF) | 500 hours | | 6,000 hours | | 600 hours |
| Self-priming Pressure *1 | 20 kPa<br>0.2 bar<br>2.84 psig | 40 kPa<br>0.4 bar<br>5.69 psig | | | |
| Inlet | 4.7 mm O.D. straight barb | 5.4 mm O.D. straight barb | | | |
| Outlet | 4.7 mm O.D. straight barb | 5.4 mm O.D. straight barb | | | |
| Insulation Classification | Class E equivalent | Class F equivalent | Class A equivalent | | Class E equivalent |
| Mounting Dimensions | 9.5 (L) x 17 (W) mm<br>3/8"(L) x 43/64"(W) | 19 (L) x 26 (W) mm<br>3/4"(L) x 1 - 1/32"(W) | 41 (W) mm<br>1 - 39/64 "(W) | | 74.5 (L) x 41 (W) mm<br>2 - 15/16"(L) x 1 - 39/64"(W) |
| Weight | 67 g<br>0.148 Lbs | 187 g<br>0.412 Lbs | 230 g<br>0.507 Lbs | | 350 g<br>0.771 Lbs |
| Motor | Brush DC Motor | | Brushless DC Motor | | Brush DC Motor |

*1. When the check valve is hardened due to low liquid temperature,self-priming performance and flow rate will go down.
*2. Restarting pumps with flow passage closed is impossible.
*3. Tubing between two pumping heads must be done in parallel. Tubing in series between the two pumping heads should not be made.
This may cause extreme pressure hike that will result in broken parts, liquid splash out or possible ignition. (DPE-800)

## Condition of Use

| | |
|---|---|
| Operating Ambient Temperature | 5 to 40°C |
| Operating Ambient Humidity | 30 to 85% |
| Operating Fluid Temperature | 5 to 50°C |

## Application Examples

- Liquid analytical instruments e.g. medical, food, water treatment & environmental.
- Liquid transport within filtration, sampling, sterilizers and washers.
- Ink transport within industrial ink-jet printers.

## Pulse Absorption Mechanism

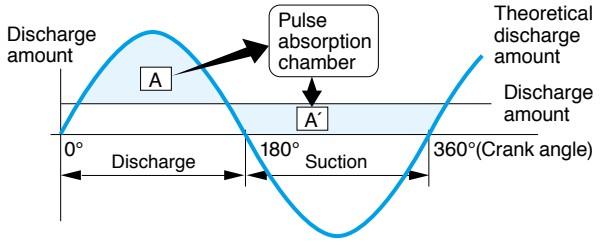


- The cause of pulsation (A) is taken into the pulse absorption chamber and discharged at the time of suction (A') to reduce pulse.
- Pulsation: Vibration due to change in pressure and flow rate

## Material of wetted parts and applicable fluids

| Model | Material of wetted parts | | | | | Example of suitable chemical liquid* | Example of unsuitable chemical liquid |
|---|---|---|---|---|---|---|---|
| | Cylinder Head | Head Cover | Diaphragm | Valve | O-ring | | |
| DPE-100-2E<br>DPE-400-2E<br>DPE-400BL-2E<br>DPE-800-2E | PA<br>Polyamide(Nylon) | | PTFE<br>Polytetrafluoroethylene | EPDM<br>Ethylene-propylene rubber | | Caustic soda, Citric acid<br>Ammonia water, Caustic potash, Ethanol | Mineral oil, Trichloroethylene, Benxaldehyde, Carbon tetrachloride, Toluene |
| DPE-100-2G<br>DPE-400-2G<br>DPE-400BL-2G<br>DPE-800-2G | | | | FKM<br>Fluoro rubber | | Ethanol, Ethylene glycol<br>Sodium carbonate, mineral oil | Chlorosulfonic acid, Folmalin, Glacial acetic acid, Methyl ethyl ketone |
| DPE-100-7G<br>DPE-400-7G<br>DPE-400BL-7G<br>DPE-800-7G | PPS<br>Polyphenylene sulfide | | | | | Xylene, Carbon tetrachloride<br>Trichloroethylene, Silicon oils, Ethanol | Acetone, Chlorosulfonic acid, Formalin, Ammonia water, Glacial acetic acid |
| DPE-100-7P<br>DPE-400-7P<br>DPE-400BL-7P<br>DPE-800-7P | | | | FFKM<br>Perfluoroelastomer | | Ethanol, Chloroform, Benzene<br>Glacial acetic acid, Methyl ethyl ketone | Chlorosulfonic acid, Fluorine oil, CFC 112, CFC 113 |

*This chart is for reference only. Please confirm under the operating conditions before use.

## External Dimensions (Unit: mm)

**DPE-100**

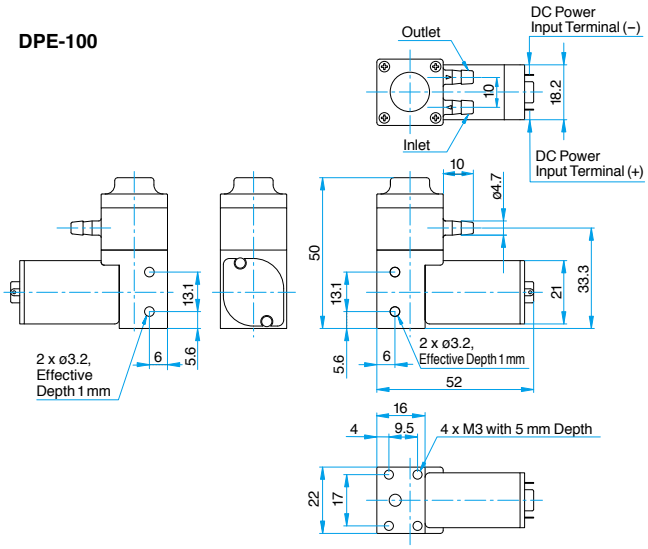


**DPE-400**

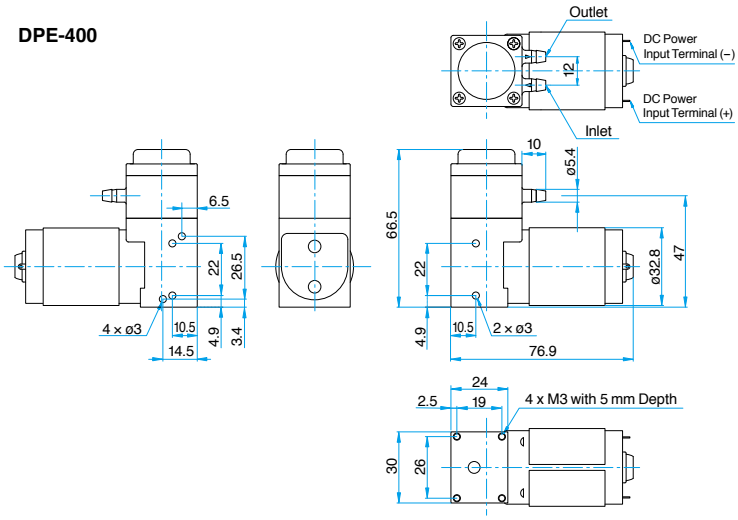


**DPE-400BL**

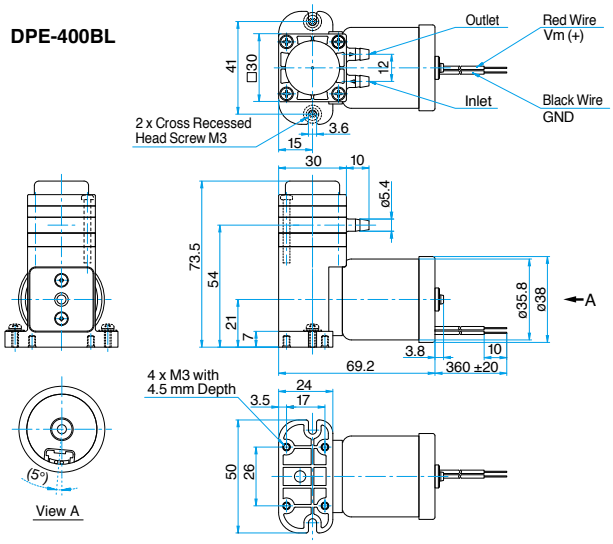


**DPE-800**

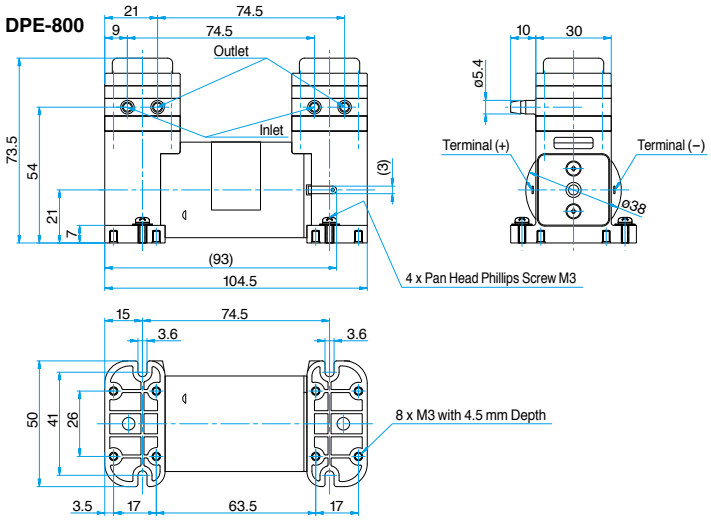

# DC Liquid Pump

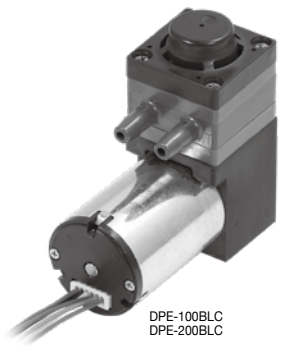
DPE-100BLC
DPE-200BLC

## Model DPE-100BLC / DPE-200BLC

CE 24 V | UKCA 24 V

**Brushless DC Motor** **24 V DC**

### Flow & Electric Current

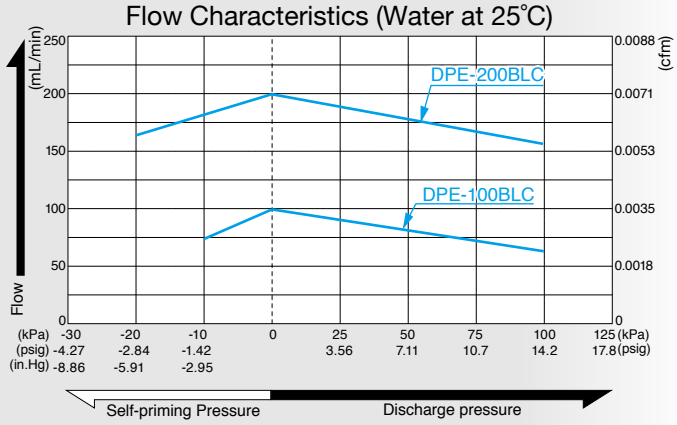


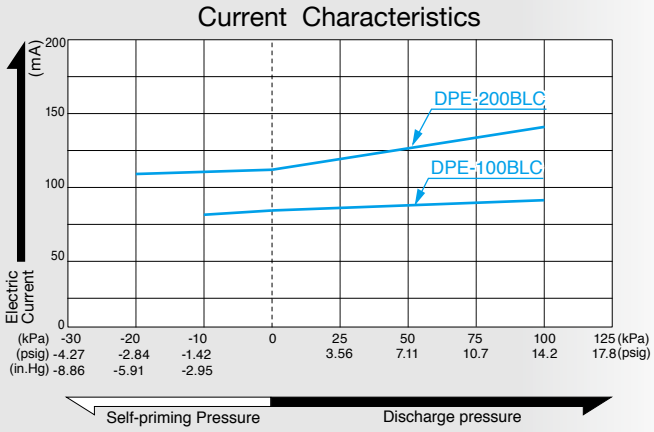


### Specifications

| Model | DPE-100BLC | DPE-200BLC |
|---|---|---|
| Rated Voltage | 24 V DC | |
| Flow Rate *1 | 100 mL/min<br>0.0035 cfm | 200 mL/min<br>0.0071 cfm |
| Working Pressure Range | 0 to 100 kPa (0 to 1 kgf/cm2)<br>0 to 1 bar<br>0 to 14.2 psig | |
| Maximum Pressure *2 | 300 kPa (3 kgf/cm2)<br>3 bar<br>42.7 psig | |
| Maximum Current | 90 mA | 140 mA |
| Duty Cycle | Continuous | |
| Rated Performance (MTTF) | 6000 hours | |
| Self-priming Pressure *1 | 10 kPa (75 mmHg)<br>0.1 bar<br>1.42 psig | 20 kPa (150 mmHg)<br>0.2 bar<br>2.84 psig |
| Inlet | 4.7 mm O.D. hose barb | |
| Outlet | 4.7 mm O.D. hose barb | |
| Insulation Classification | Class E equivalent | |
| Mounting Dimensions | 9.5(L)× 17(W) mm<br>3/8"(L) x 43/64"(W) | |
| Weight | 80 g<br>0.176 Lbs | |

*1 When the check valve is hardened due to low liquid temperature, self-priming performance and flow rate will go down.
*2 The unit cannot be restarted with flow passage closed. It cannot be used at the maximum pressure.

### Condition of Use

| | |
|---|---|
| Operating Ambient Temperature | 5 to 40°C |
| Operating Ambient Humidity | 30 to 85% |
| Operating Fluid Temperature | 5 to 50°C |

### Application Examples

- Liquid transport for analytical instruments e.g. medical, food, water treatment and environment measurement.
- Liquid transport within filtration, sampling, washers and sterilizers.
- Ink transport within industrial ink-jet printers.

### Pulse Absorption Mechanism

1. Suction
2. Discharge. Partial fluid delivery to pulse absorption chamber, not directly forced to outlet port.
3. Cyclical suction drawn into pump is synchronized with the discharge. Pulses are attenuated through the process of 2 and 3 .

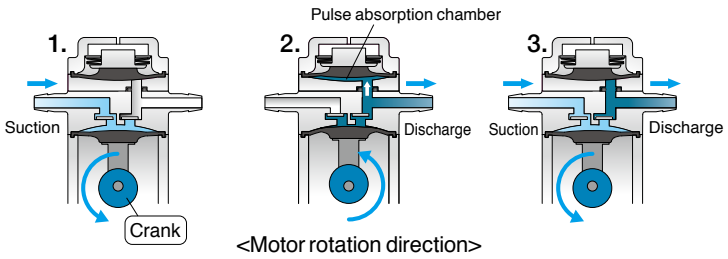


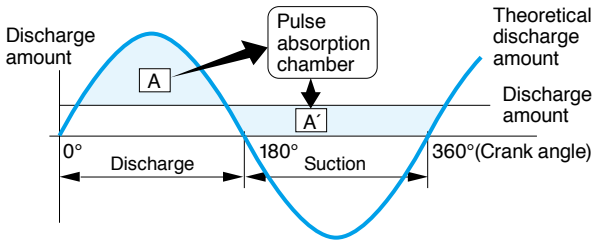


- The cause of pulsation (A) is taken into the pulse absorption chamber and discharged at the time of suction (A') to reduce pulse.
- Pulsation: Vibration due to change in pressure and flow rate

## Material of wetted parts and applicable fluid

| Model | Material of wetted parts | | | | | Example of suitable chemical liquid * | Example of unsuitable chemical liquid |
|---|---|---|---|---|---|---|---|
| | Cylinder Head | Head Cover | Diaphragm | Valve | O-ring | | |
| **DPE-100BLC-2E**<br>**DPE-200BLC-2E** | PA<br>Polyamide(Nylon) | | PTFE<br>Polytetrafluoroethylene | EPDM<br>Ethylene-propylene rubber | | Ammonia water, Citric acid,<br>Caustic soda, Ethanol, Caustic potash | Mineral oil, Trichloroethylene, Benzaldehyde,<br>Carbon tetrachloride, Toluene |
| **DPE-100BLC-7G**<br>**DPE-200BLC-7G** | PPS<br>Polyphenylene sulfide | | | FKM<br>Fluoro rubber | | Ethanol, Carbon tetrachloride,<br>Trichloroethylene, Xylene, Silicone oil | Acetone, Chlorosulfonic acid, Formalin,<br>Ammonia water, Glacial acetic acid |
| **DPE-100BLC-7P**<br>**DPE-200BLC-7P** | | | | FFKM<br>Perfluoroelastomer | | Ethanol, Glacial acetic acid,<br>Methyl ethyl ketone, Chloroform, Benzene | Chlorosulfonic acid, CFC 112,<br>Fluorine oil, CFC 113 |

*This chart is for reference only. Please confirm under the operating conditions before use.

## Control Function

| No. | Function | Specifications | Conditions |
|---|---|---|---|
| 1 | Power source | 24 V DC | |
| 2 | | GND | |
| 3 | FG signal output | 6 Pulse/1 Rotation | Open-drain output |
| | Pull up voltage | 5 V DC | |
| 4 | PWM control input | 0 to 100% | 2 to 5 V DC (max=5 V DC) Recommended frequency 15 to 25 kHz |
| | Voltage control input | 0 to 5 V DC max=5 V DC | Variability range =0.6 to 3.2 V DC (Duty cycle: 0 to 100%) |
| 5 | PWM control selection | ON/OFF | PWM control ON with open circuit |
| | Voltage control selection | ON/OFF | Voltage control ON with 2 to 5 V DC input |
| 6 | 5 V DC output | 5 V DC output | 5 V DC output during motor startup |

### Reference circuit diagram

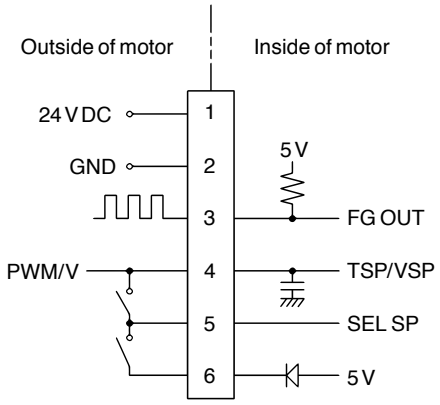


### Reference of voltage control

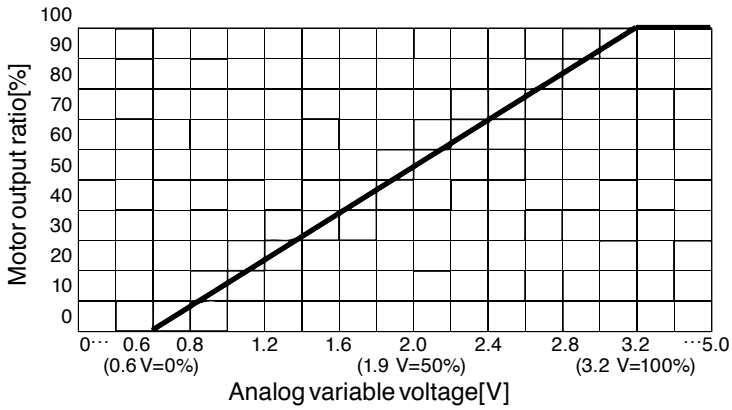


•The actual number of rotations of motor depends on the power supply voltage and load conditions of pump.
Examine the variable state of pump output under the conditions of actual use.

## External Dimensions (Unit: mm)

**DPE-100BLC**
**DPE-200BLC**

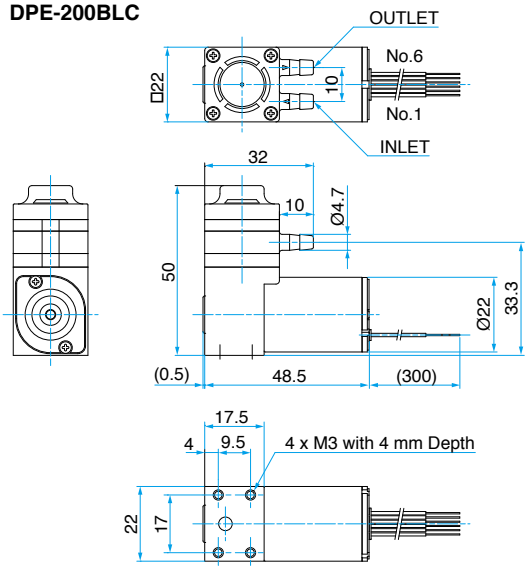


### Connection table

| | | Power Source | | Control Signal | | | |
|---|---|---|---|---|---|---|---|
| Circuit No. | | 1 | 2 | 3 | 4 | 5 | 6 |
| Cord Color | | RED | BLACK | YELLOW | BLUE | GREEN | BROWN |
| Function | | V+ | V- | Pulse | PWM or voltage input | Voltage control | DC 5V output |
| Selection of connection | With no control | ON | | | ON*1 | | ON*1 |
| | PWM control | ON | | | ON*2 | | |
| | Voltage control | ON | | | ON*3 | ON*3 | ON*3 |
| Cord Size | | AWG26 | | AWG28 | | | |
| Cord UL Style | | UL1061 | | | | | |

*1 For non-control (Duty cycle: 100%) drive, short-circuit pins 4 and 6.
*2 For PWM control drive, keep pin 5 in an open state and input PWM signal (Duty cycle: 0 to 100%, 2 to 5 V DC, and recommended frequency 15 to 25 kHz) to pin 4.
*3 For analog voltage control drive, short-circuit pins 5 and 6 and apply the voltage (0 to 5 V DC and variable range 0.6 to 3.2 V DC) to pin 4.
•Take noise countermeasures for the signal wire if necessary.
•Please cut the unnecessary lead wires so that there is no trouble in operating the unit.

AC LINEAR
Free Piston Blower

# MEDO BLOWER

## LA series

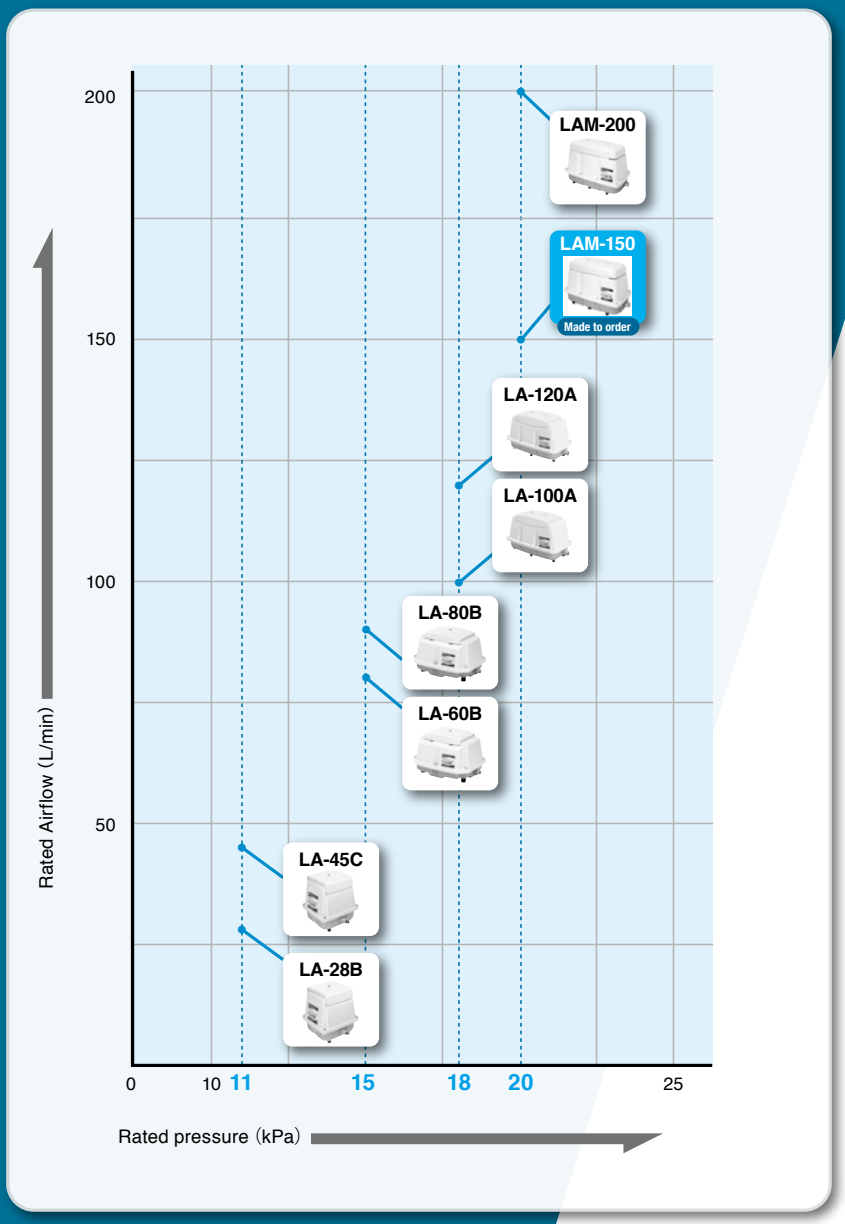


Page


LA-28B — 95
LA-45C — 95
LA-60B — 96
LA-80B — 96
LA-100A — 97
LA-120A — 97
LAM-200 — 98

Made to Order
LAM-150 — 109

# MEDO BLOWER

## Model LA-28B / LA-45C

120 V (60 Hz) | 230 V (50 Hz) LA-28B | 230 V (50 Hz) LA-45C | 230 V (50 Hz) LA-28B/LA-45C

### Airflow Characteristics

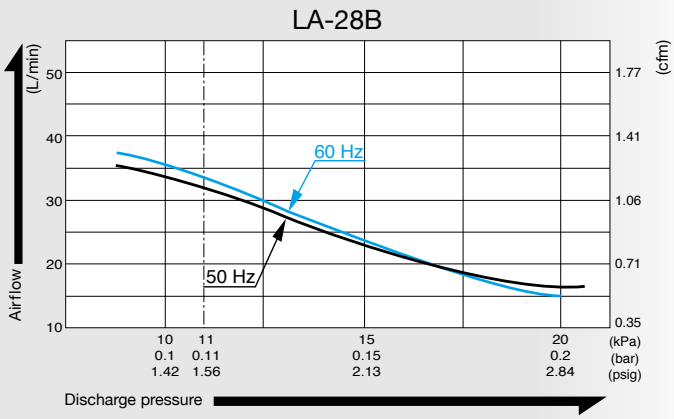


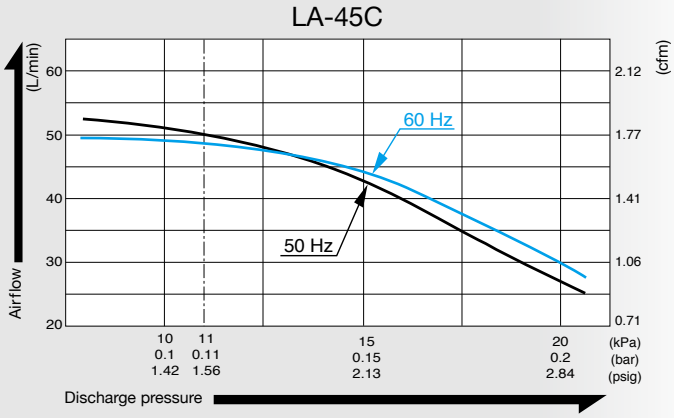


### Specifications

| | LA-28B | | LA-45C | |
|---|---|---|---|---|
| Power Supply | 120 V AC | 230 V AC* | 120 V AC | 230 V AC* |
| Rated Frequency | 60 Hz | 50 Hz | 60 Hz | 50 Hz |
| Power Consumption | 25.5 W | 29 W | 45 W | 47 W |
| Rated Pressure | 11 kPa (0.11 kgf/cm$^2$)<br>0.11 bar<br>1.56 psig | | | |
| Rated Airflow | 28 L/min<br>0.99 cfm | | 45 L/min<br>1.59 cfm | |
| Weight | 2.9 kg<br>6.4 Lbs | | 3.2 kg<br>7.1 Lbs | |

*Please contact us for 240 V AC model.

### Optional Hose Assemblies

| LB03185 | LB08316 |
|---|---|
| | |

### Application Examples

Liquid Mixer Bubbling

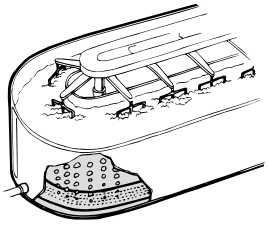

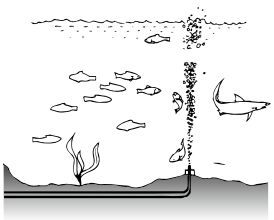

### External Dimensions (Unit: mm)

**LA-28B**

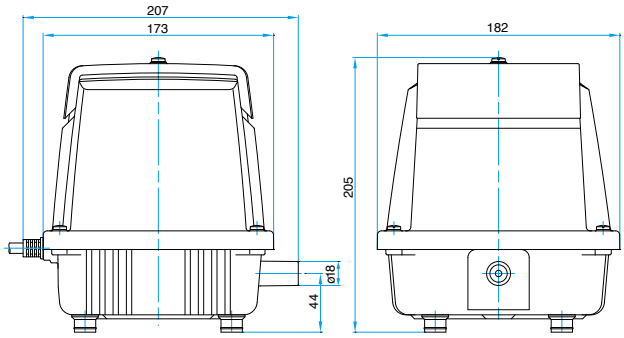


**LA-45C**

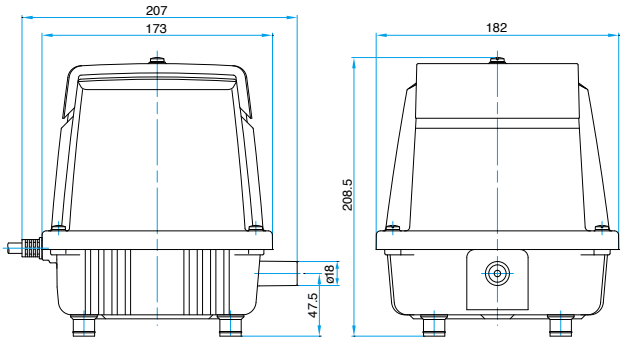

# MEDO BLOWER

## Model LA-60B / LA-80B

120 V (60 Hz) | 230 V (50 Hz) LA-60B | 230 V/240 V (50 Hz) LA-80B | 230 V (50 Hz) LA-60B/LA-80B

### Airflow Characteristics

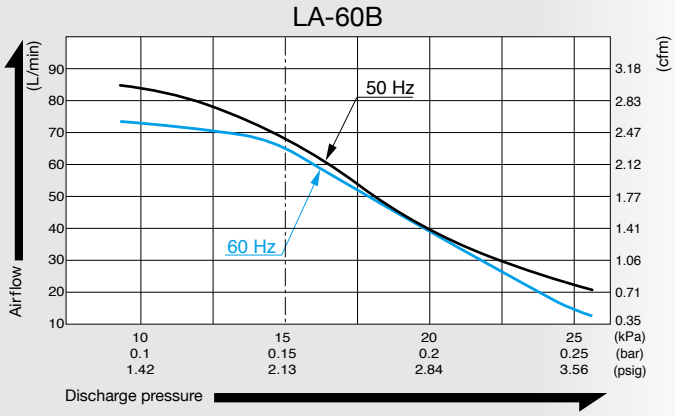


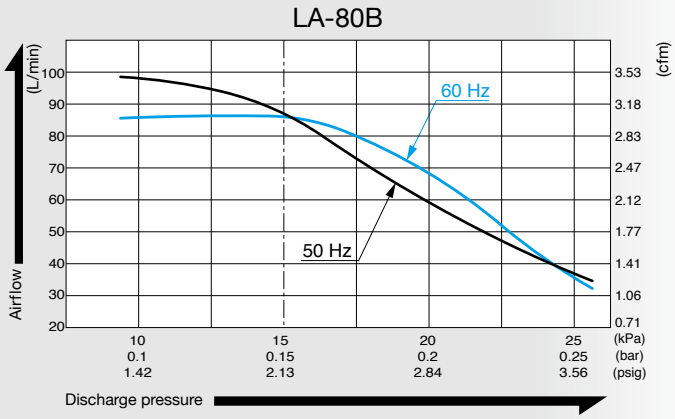


### Specifications

| | LA-60B | | LA-80B | |
|---|---|---|---|---|
| Power Supply | 120 V AC | 230 V AC* | 120 V AC | 230/240 V AC |
| Rated Frequency | 60 Hz | 50 Hz | 60 Hz | 50 Hz |
| Power Consumption | 60 W | 64 W | 80 W | 86 W |
| Rated Pressure | 15 kPa (0.15 kgf/cm$^2$)<br>0.15 bar<br>2.13 psig | | | |
| Rated Airflow | 60 L/min<br>2.12 cfm | | 80 L/min<br>2.83 cfm | |
| Weight | 5.0 kg<br>11 Lbs | | 5.3 kg<br>11.7 Lbs | |

*Please contact us for 240 V AC model.

### Optional Hose Assemblies

| LB03185 | LB08316 |
|---|---|
| | |

### Application Examples

**Liquid Mixer Bubbling**

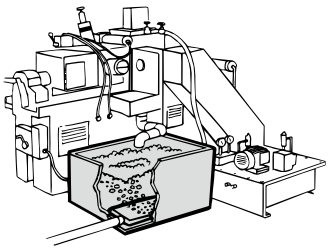

**Home Aerobic Sewage Treatment System**

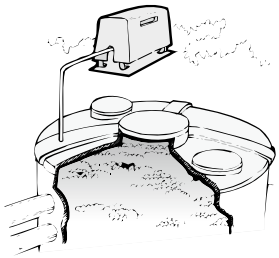

### External Dimensions (Unit: mm)

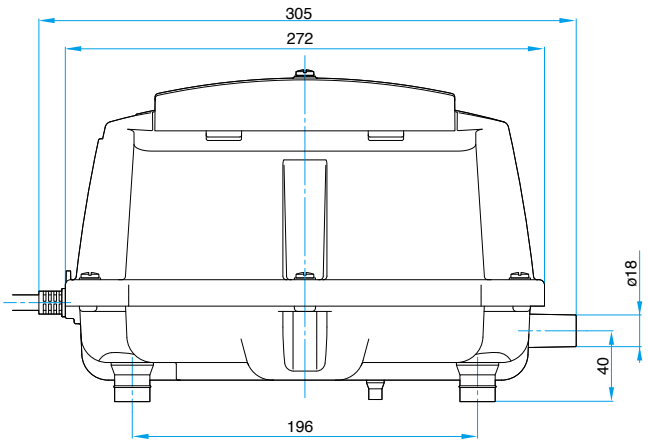


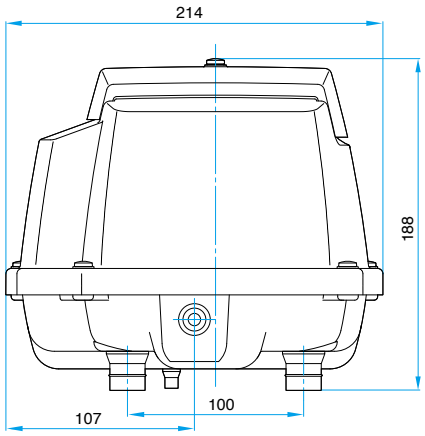

# MEDO BLOWER

## Model LA-100A / LA-120A

120 V is made to order

120 V (60 Hz) | 230 V (50 Hz) LA-100A | 230 V/240 V (50 Hz) LA-120A | 230 V (50 Hz) LA-100A/LA-120A

### Airflow Characteristics

LA-100A

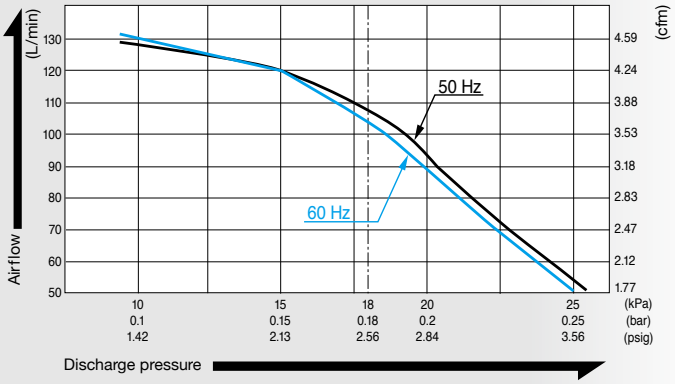


LA-120A

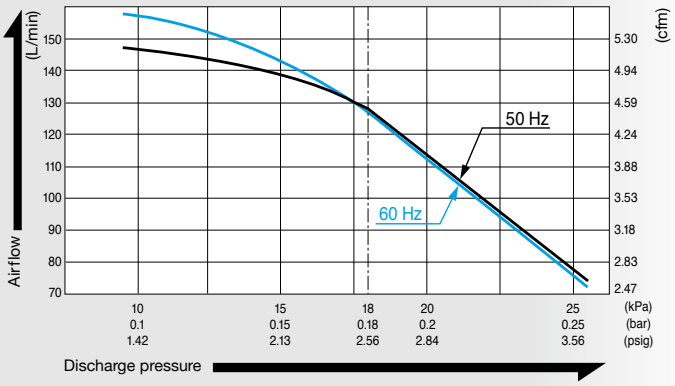


### Specifications

| | LA-100A | | LA-120A | |
|---|---|---|---|---|
| Power Supply | 120 V AC*1 | 230 V AC*2 | 120 V AC*1 | 230/240 V AC |
| Rated Frequency | 60 Hz | 50 Hz | 60 Hz | 50 Hz |
| Power Consumption | 95 W | 100 W | 118 W | 130 W |
| Rated Pressure | 18 kPa (0.18 kgf/cm$^2$)<br>0.18 bar<br>2.56 psig | | | |
| Rated Airflow | 100 L/min<br>3.53 cfm | | 120 L/min<br>4.24 cfm | |
| Weight | 9.7 kg<br>21.4 Lbs | | | |

*1: 120 V is made to order.
*2: Please contact us for 240 V AC model.

### Optional Hose Assemblies

| LB03965 | LB01070 |
|---|---|
| 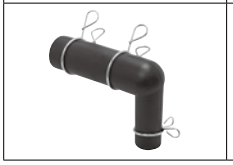 | |

### Application Examples

Liquid Mixer Bubbling

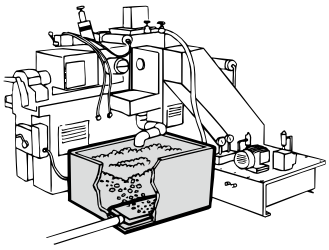

Home Aerobic Sewage Treatment System

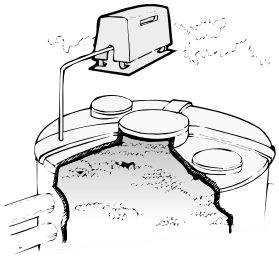

### External Dimensions (Unit: mm)

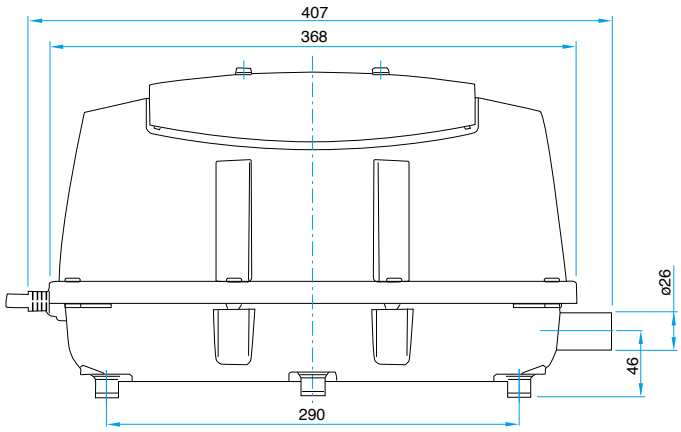


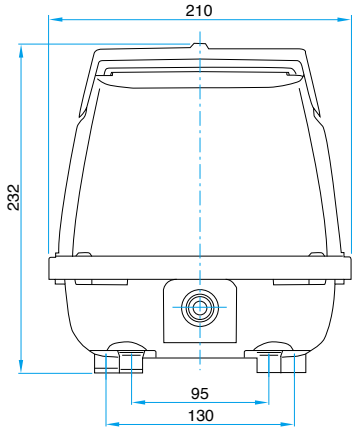

# MEDO BLOWER

## Model LAM-200

120 V (60 Hz) | 230 V/240 V (50 Hz) | 230 V (50 Hz)

LAM-200

### Airflow Characteristics

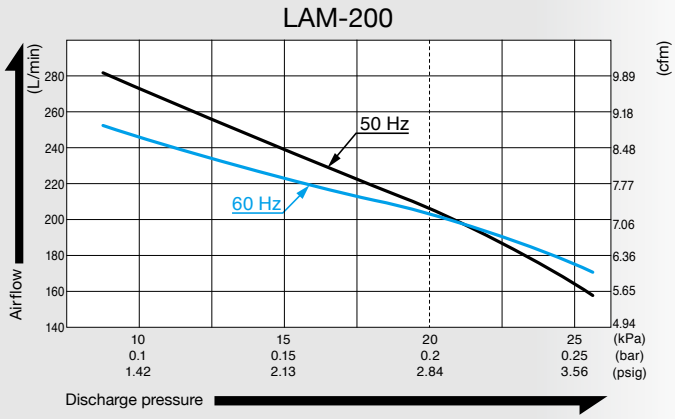


### Specifications

| | LAM-200 | |
|---|---|---|
| Power Supply | 120 V AC | 230/240 V AC |
| Rated Frequency | 60 Hz | 50 Hz |
| Power Consumption | 215 W | |
| Rated Pressure | 20 kPa (0.2 kgf/cm$^2$)<br>0.2 bar<br>2.84 psig | |
| Rated Airflow | 200 L/min<br>7.06 cfm | |
| Weight | 12.3 kg<br>27.1 Lbs | |

### Optional Hose Assemblies

| LB03965 | LB01070 |
|---|---|
| | |

### Application Examples

Grease Trap

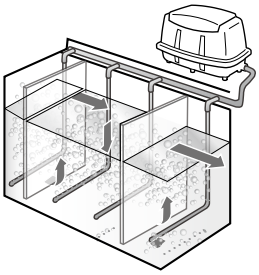

Home Aerobic Sewage Treatment System

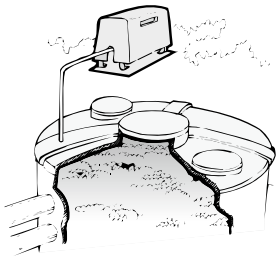

### External Dimensions (Unit: mm)

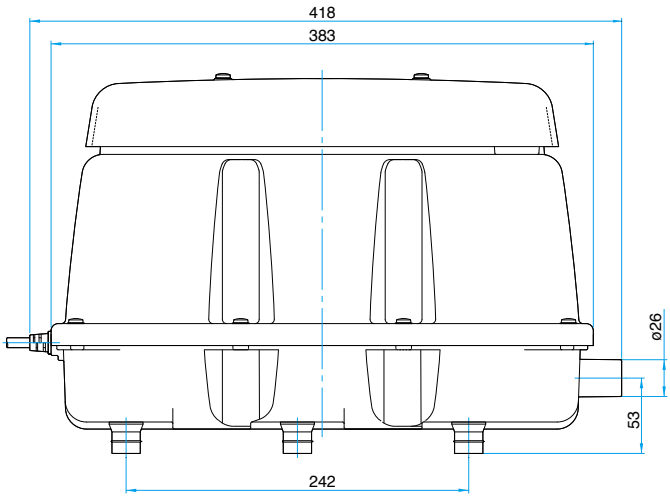


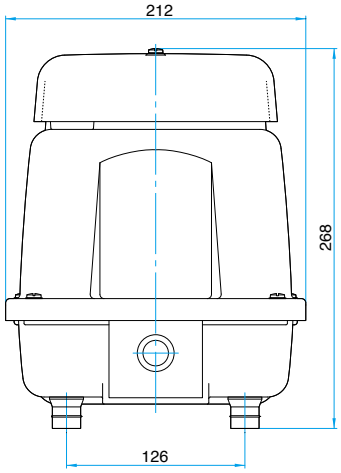

# MADE TO ORDER


| | | Page |
|---|---|---|
| Compressor | AC0210 | 101 |
| | AC0610A | 102 |
| Vacuum Pump | VP0925A | 103 |
| | VP0660 x 2 | 104 |
| Diaphragm Pump | VCK0120 VacuumPump Type | 105 |
| | VC0101E Dual Type | 106 |
| | VC0101E Blower Type | 107 |
| | VC0101S Dual Type | 108 |
| Blower | LAM-150 | 109 |
| Piezoelectric Pump | Made to order model | 110 |

# Compressor

## Model ACO210

Made to order

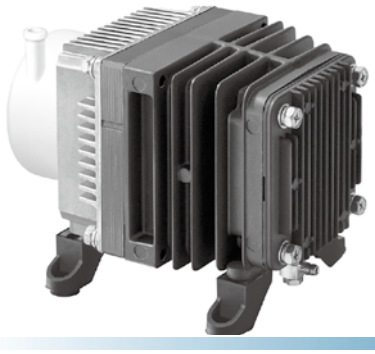

### Airflow & Power Consumption

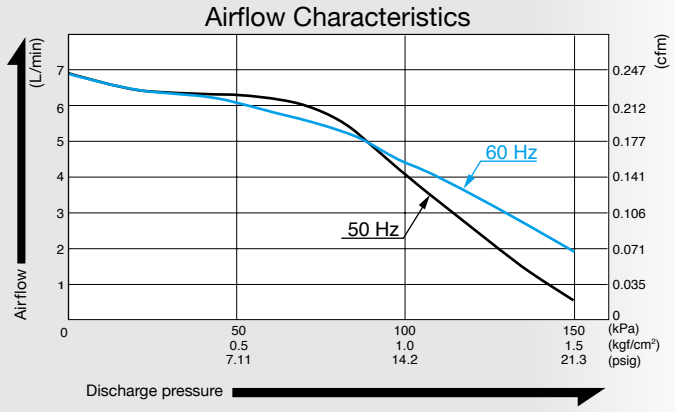


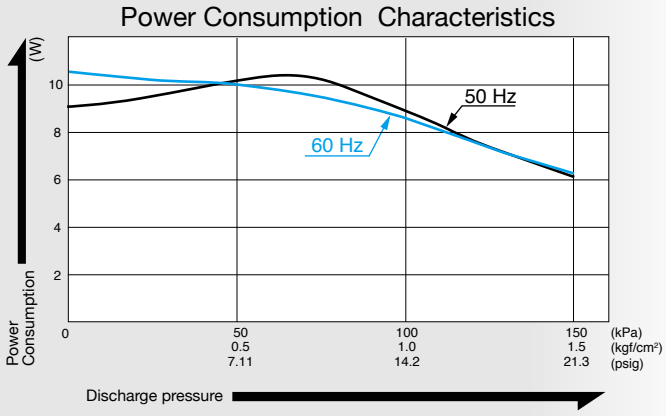


### Specifications

| | | |
|---|---|---|
| Rated Pressure | 100 kPa (1.0 kgf/cm²)<br>1.0 bar<br>14.2 psig | |
| Rated Airflow | 3.5 L/min<br>0.124 cfm | |
| Maximum Pressure | 120 kPa (1.2 kgf/cm²)<br>1.2 bar<br>17.1 psig | |
| Rated Voltage | 115 V AC | 230 V AC |
| Power Consumption | 23 W | 24 W |
| Rated Frequency | 60 Hz | 50 Hz |
| Rated Performance | 5,000 hours | |
| Outlet | 4.7 mm O.D. hose barb | |
| Duty Cycle | Continuous | |
| Coil Insulation Class | Class B for UL | Class E equivalent |
| Mounting Dimensions | 76 (L) x 88 (W) mm<br>2 - 63/64" (L) x 3 - 15/32" (W) | |
| Weight | 1.7 kg<br>3.7 Lbs | |
| Leadwire Length | 300 mm<br>11 - 13/16" | |

### Application Examples

**Air Bearing for Precision Machines**

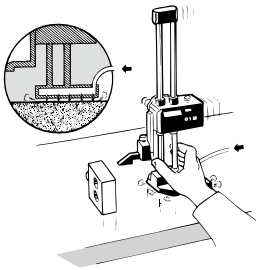

**Nebulizer**

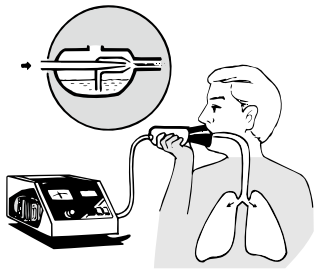

### External Dimensions (Unit: mm)

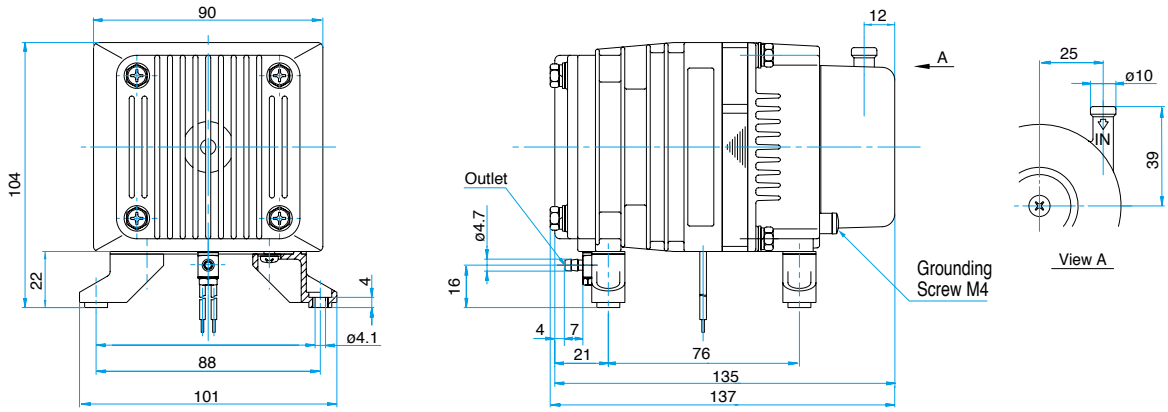

# Compressor

## Model AC0610A

Made to order

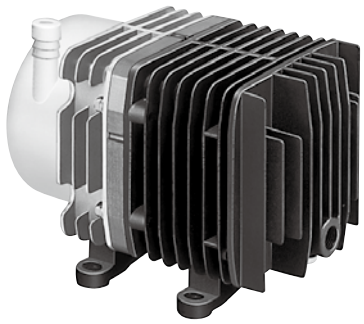

### Airflow & Power Consumption

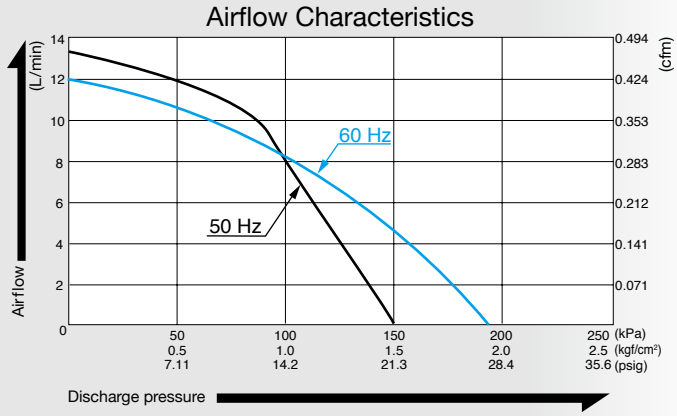


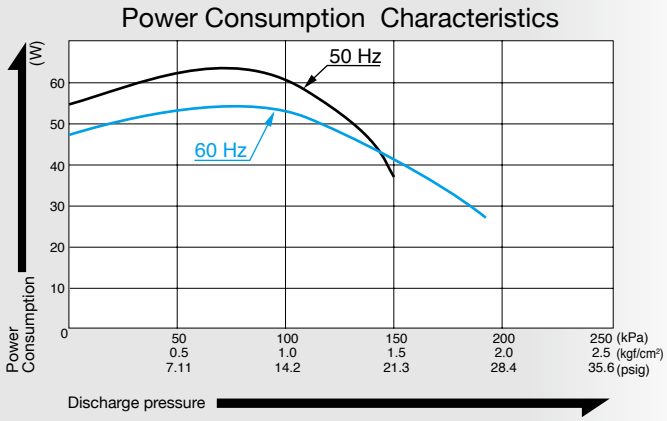


### Specifications

| | | |
|---|---|---|
| Rated Pressure | 100 kPa (1.0 kgf/cm²)<br>1.0 bar<br>14.2 psig | |
| Rated Airflow | 8 L/min<br>0.283 cfm | |
| Maximum Pressure | 150 kPa (1.5 kgf/cm²)<br>1.5 bar<br>21.3 psig | |
| Rated Voltage | 115 V AC | 230 V AC |
| Power Consumption | 52 W | 60 W |
| Rated Frequency | 60 Hz | 50 Hz |
| Rated Performance | 10,000 hours | |
| Outlet | ISO Rc 1/4 | |
| Duty Cycle | Continuous | |
| Coil Insulation Class | Class F equivalent | |
| Mounting Dimensions | 68 (L) x 84 (W) mm<br>2 - 43/64" (L) x 3 - 5/16" (W) | |
| Weight | 3.2 kg<br>7.1 Lbs | |
| Leadwire Length | 200 mm<br>7 - 7/8" | |

### Application Examples

**Dispenser**

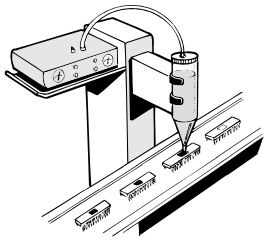

**Automatic Stamper**

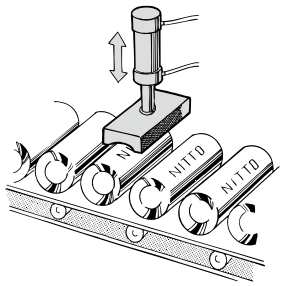


### External Dimensions (Unit: mm)

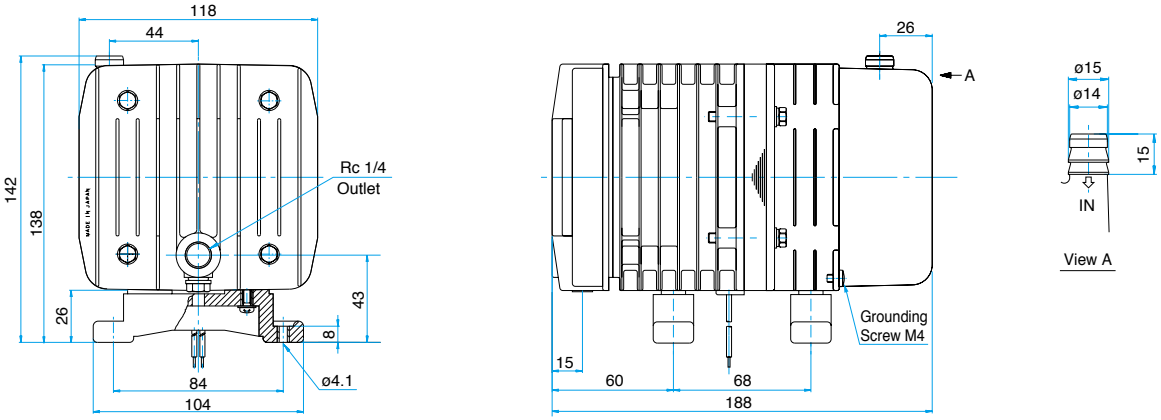

# Vacuum Pump

## Model VP0925A

Made to order

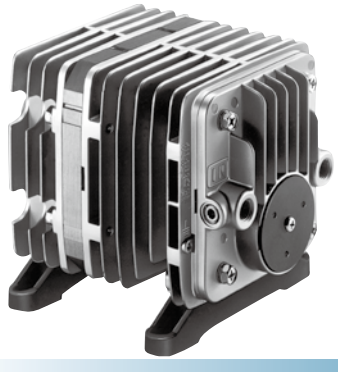

### Airflow & Power Consumption

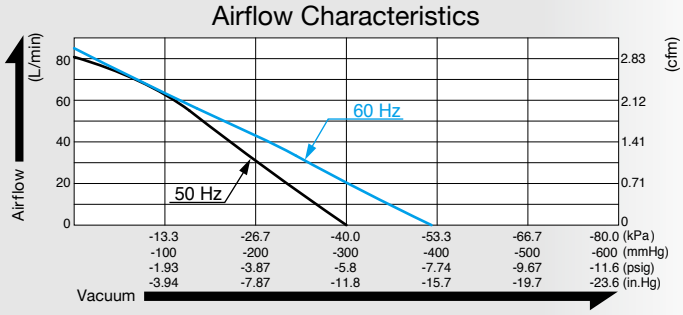


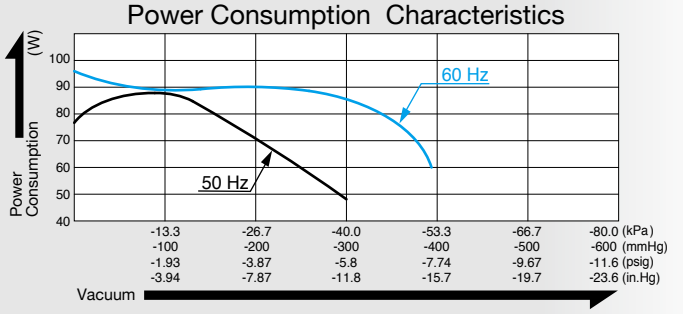


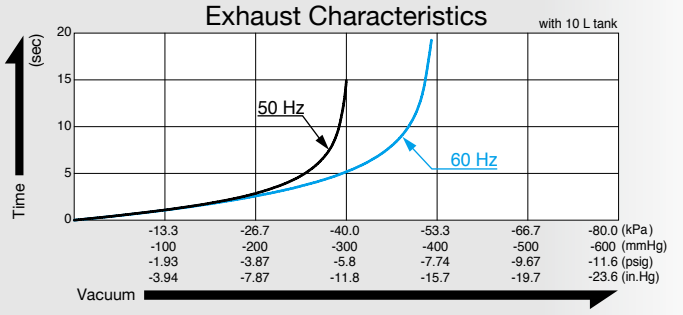


### Specifications

| | | |
|---|---|---|
| Attainable Vacuum *1 | -33.3 kPa (-250 mmHg)<br>-333 mbar<br>-9.84 in. Hg | |
| Free Air Displacement | 80 L/min<br>2.83 cfm | |
| Rated Voltage | 115 V AC | 230 V AC |
| Power Consumption | 95 W | 88 W |
| Rated Frequency | 60 Hz | 50 Hz |
| Rated Performance | 10,000 hours | |
| Inlet | ISO Rc 1/4 | |
| Outlet | ISO Rc 1/4 | |
| Duty Cycle | Continuous | |
| Coil Insulation Class | Class B equivalent | |
| Mounting Dimensions | 102 (L) x 130 (W) mm<br>4 - 1/64" (L) x 5 - 1/8" (W) | |
| Weight | 4.5 kg<br>9.9 Lbs | |
| Leadwire Length | 300 mm<br>11 - 13/16" | 320 mm<br>12 - 19/32" |

*1: Operations at higher than -33.3 kPa need an additional leak valve or relief valve on the inlet piping.

### Application Examples

**Microfiche Camera**

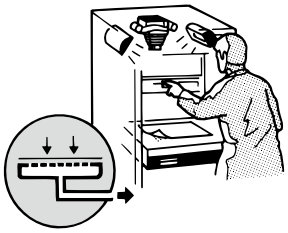

**Vacuum Material Handling Equipment**

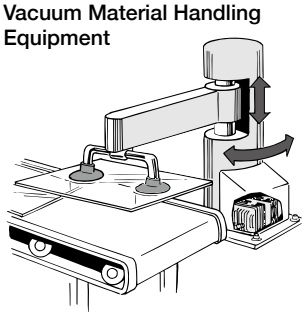

### External Dimensions (Unit: mm)

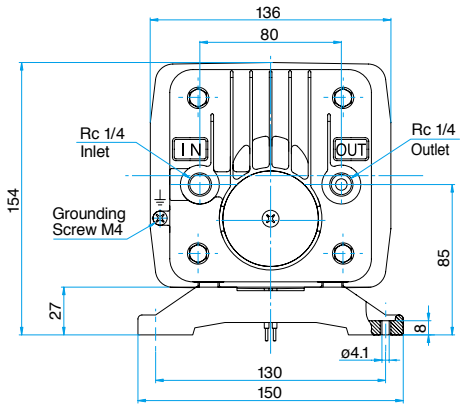


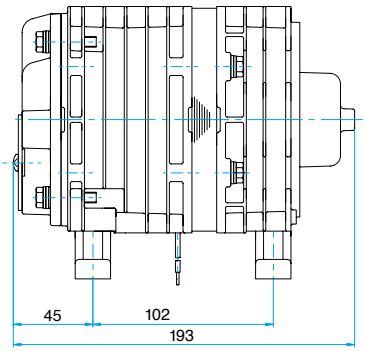

# Vacuum Pump

## Model VP0660x2

Made to order

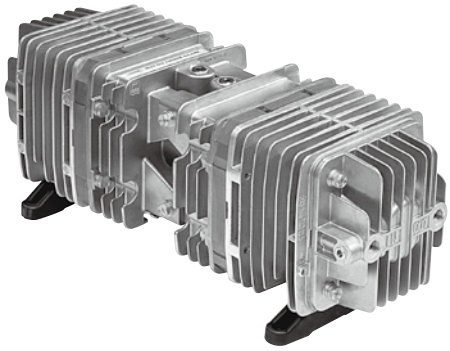

### Airflow & Power Consumption

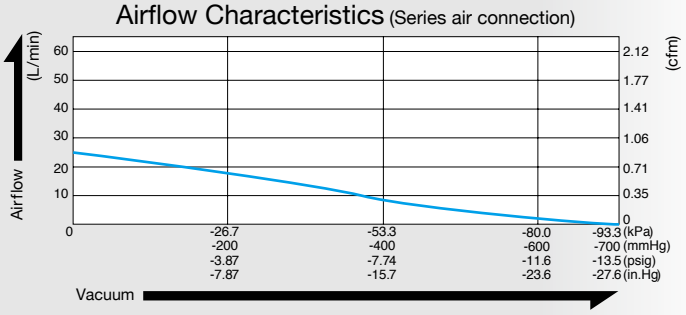


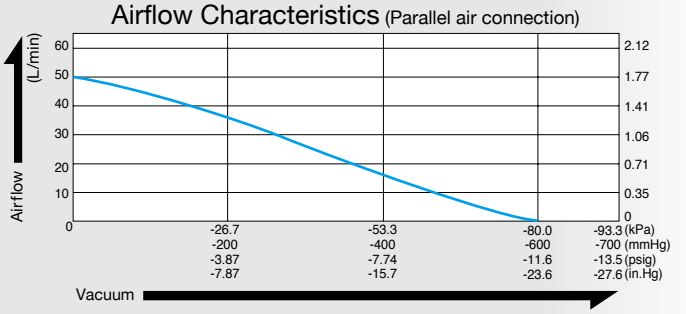


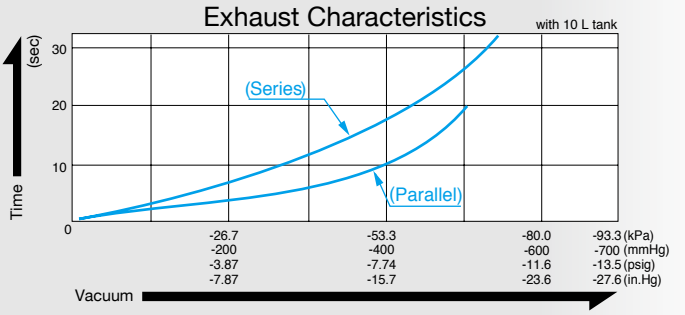


### Specifications

| | | | | |
|---|---|---|---|---|
| Attainable Vacuum *1 | Series Connection | -93.3 kPa (-700 mmHg) -933 mbar -27.6 in. Hg | Parallel Connection | -80 kPa (-600 mmHg) -800 mbar -23.6 in. Hg |
| Free Air Displacement | | 25 L/min 0.88 cfm | | 50 L/min 1.77 cfm |
| Rated Performance | 6,000 hours | | | |
| Rated Voltage | 115 V AC | | 230 V AC | |
| Power Consumption | 125 W | | 100 W | |
| Rated Frequency | 60 Hz | | 50 Hz | |
| Inlet | ISO Rc 1/4, 2 ports | | | |
| Outlet | ISO Rc 1/4, 2 ports | | | |
| Duty Cycle | Continuous | | | |
| Coil Insulation Class | Class B equivalent | | | |
| Mounting Dimensions | 280 (L) x 130 (W) mm 11 - 1/32" (L) x 5 - 1/8" (W) | | | |
| Weight | 10 kg 22 Lbs | | | |
| Leadwire Length | 150 mm 5 - 7/8" | | 600 mm 23 - 5/8" | |

*1: Operations at higher than -93.3 kPa in series or -80 kPa in parallel need an additional leak valve or relief valve on the inlet piping.

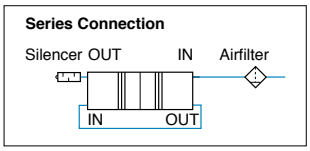


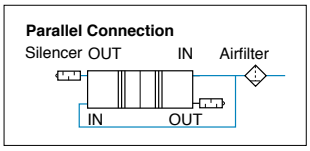


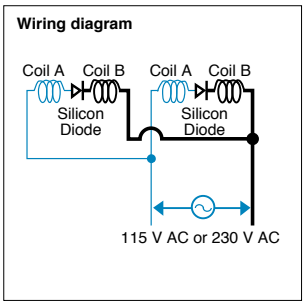


* Air line connection is required by the user.

### External Dimensions (Unit: mm)

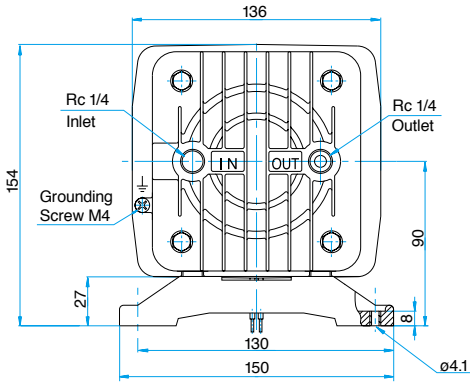


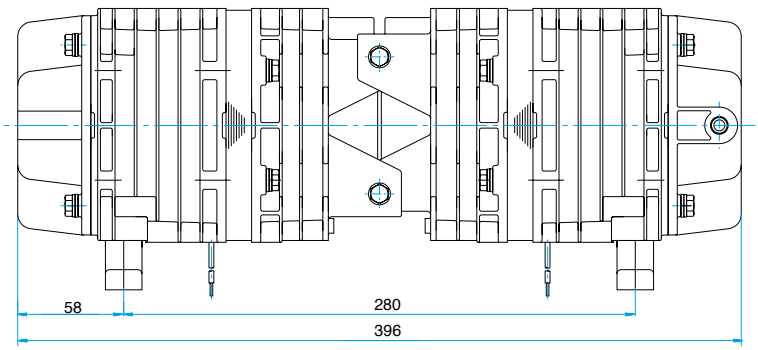

# Vacuum Pump

## Model VCK0120

Made to order

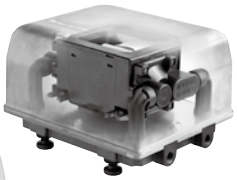

*Internal image

### Airflow & Power Consumption

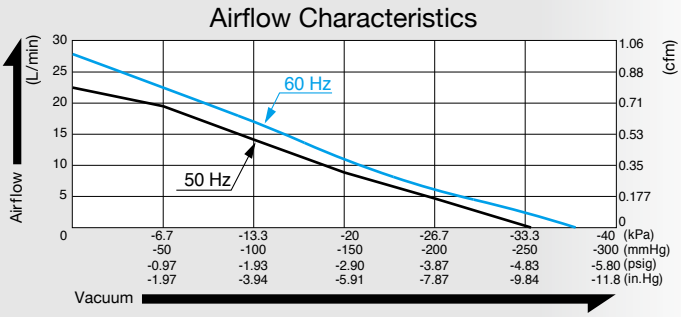


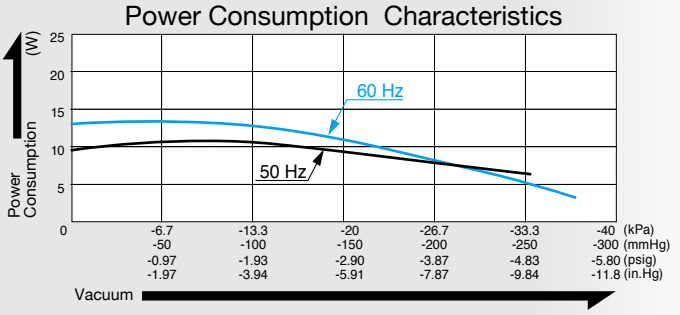


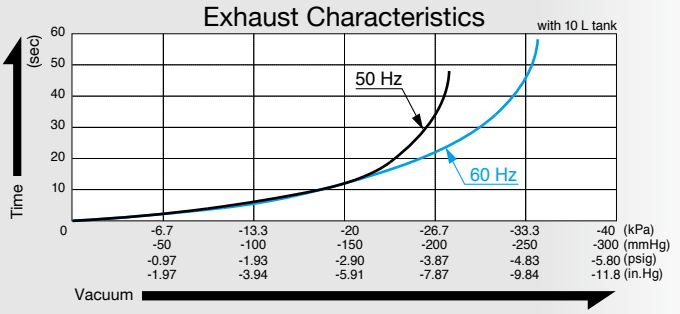


### Specifications

| | | |
|---|---|---|
| Attainable Vacuum | -26.7 kPa (-200 mmHg)<br>- 267 mbar<br>- 7.87 in.Hg | |
| Free Air Displacement | 18 L/min<br>0.64 cfm | |
| Rated Voltage | 120 V AC | 230 V AC |
| Power Consumption | 14 W | 11 W |
| Rated Frequency | 60 Hz | 50 Hz |
| Rated Performance | 5,000 hours | |
| Inlet | ISO Rc 1/8 | |
| Outlet | ISO Rc 1/8 | |
| Duty Cycle | Continuous | |
| Coil Insulation Class | Class B equivalent | |
| Mounting Dimensions | 152 (L) x 128 (W) mm<br>5 - 63/64" (L) x 5 - 3/64" (W) | |
| Weight | 1.9 kg<br>4.2 Lbs | |
| Leadwire Length | 300 mm<br>11 - 13/16" | |

### Application Examples

**Medical Cup Suction**

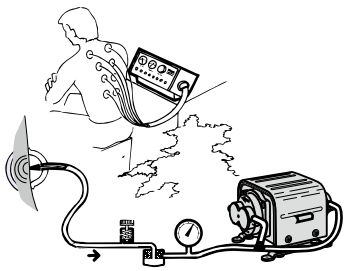

### External Dimensions (Unit: mm)

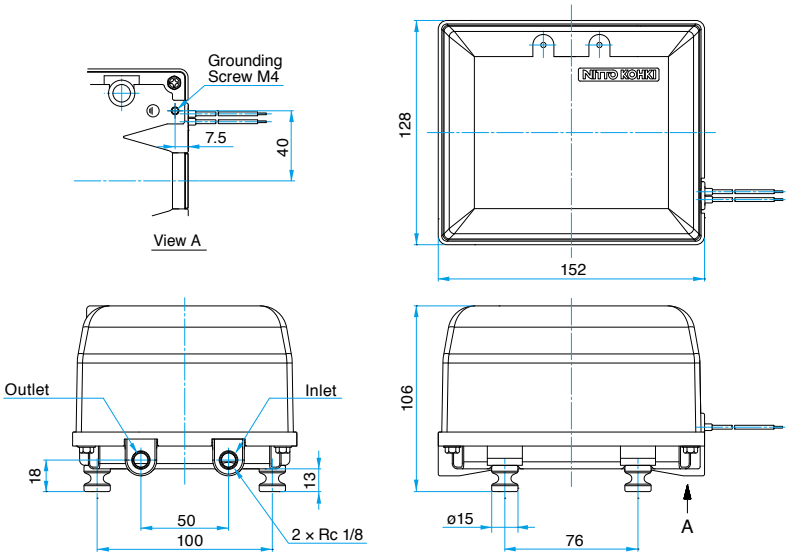

# Compressor and Vacuum Pump

## Model VC0101E

Made to order

### Dual Type

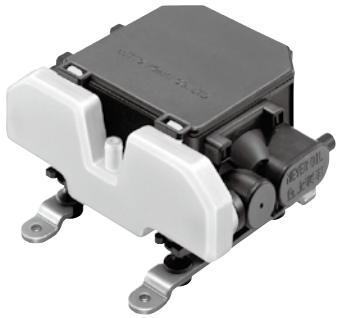

## Airflow & Power Consumption

### Airflow Characteristics

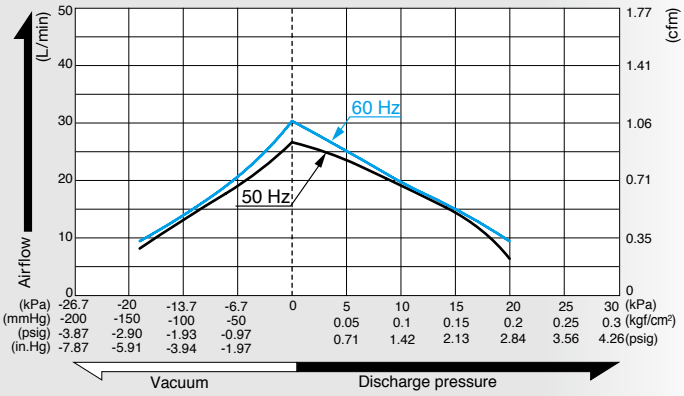


### Power Consumption Characteristics

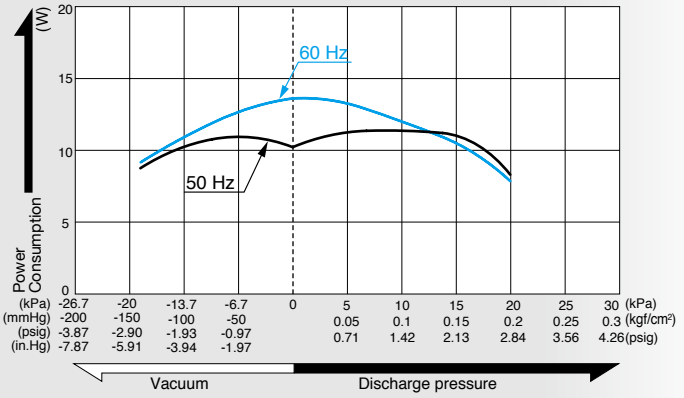


## Specifications

| | | |
|---|---|---|
| Rated Pressure | 10 kPa (0.1 kgf/cm²)<br>0.1 bar<br>1.42 psig | |
| Rated Airflow | 15 L/min<br>0.53 cfm | |
| Maximum Pressure | 20 kPa (0.2 kgf/cm²)<br>0.2 bar<br>2.84 psig | |
| Attainable Vacuum | -18.7 kPa (-140 mmHg)<br>-186 mbar<br>-5.51 in.Hg | |
| Rated Voltage | 120 V AC | 230 V AC |
| Power Consumption | 11.5 W | |
| Rated Frequency | 60 Hz | 50 Hz |
| Rated Performance | 5,000 hours | |
| Working Pressure Range | -18.7 kPa to 20 kPa<br>(-140 mmHg to 0.2 kgf/cm²)<br>-187 mbar to 0.2 bar<br>-5.51 in.Hg to 2.84 psig | |
| Inlet | 7.5 mm O.D. hose barb | |
| Outlet | 7.5 mm O.D. hose barb | |
| Duty Cycle | Continuous | |
| Coil Insulation Class | Class E equivalent | |
| Mounting Dimensions | 66 (L) x 100 (W) mm<br>2 - 19/32" (L) x 3 - 15/16" (W) | |
| Weight | 0.82 kg<br>1.81 Lbs | |
| Leadwire Length | 300 mm<br>11 - 13/16" | |

A UL approved model for 120 V is available upon request.

## Application Examples

**Massage Devices**

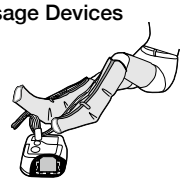

**Bedsore Prevention Mattress**

## External Dimensions (Unit: mm)

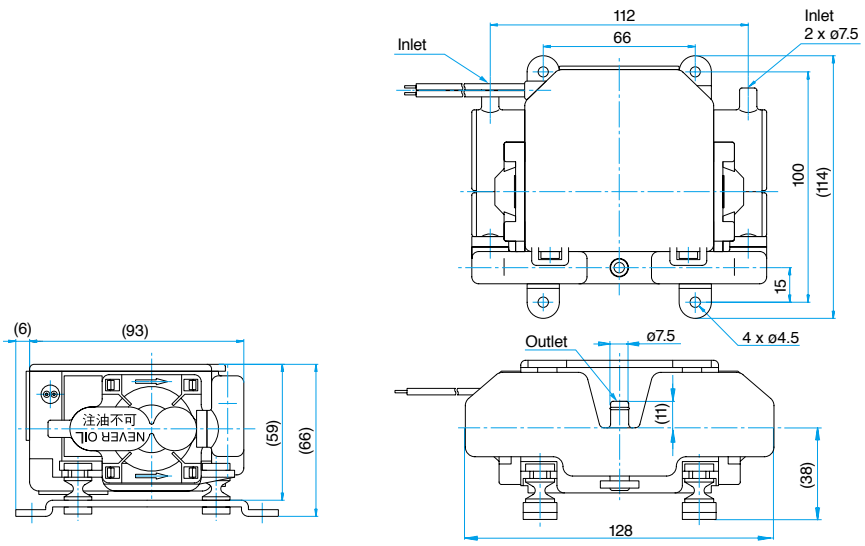

# Compressor

## Model VC0101E

Made to order

### Blower Type

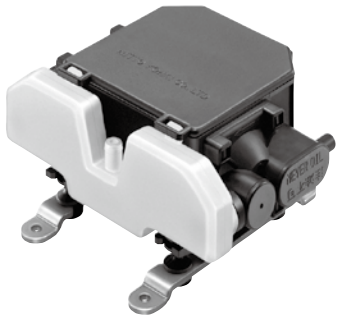

## Airflow & Power Consumption

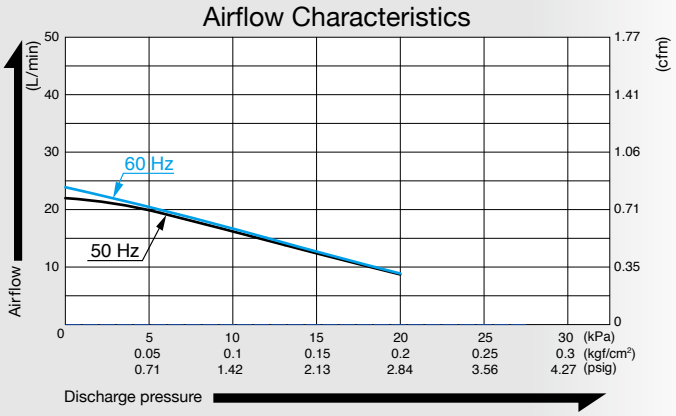


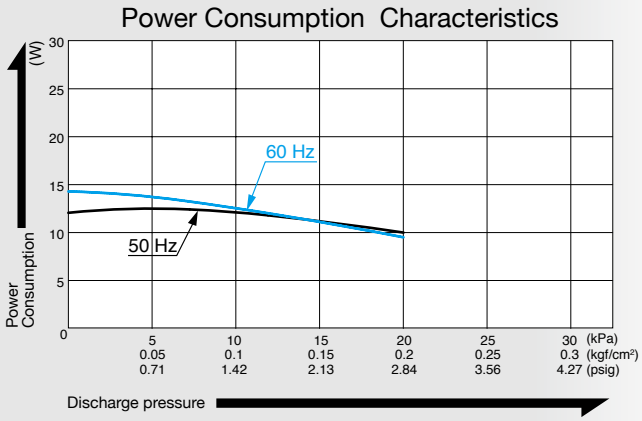


## Specifications

| | | |
|---|---|---|
| Rated Pressure | 10 kPa (0.1 kgf/cm²)<br>0.1 bar<br>1.42 psig | |
| Rated Airflow | 15 L/min<br>0.53 cfm | |
| Maximum Pressure | 20 kPa (0.2 kgf/cm²)<br>0.2 bar<br>2.84 psig | |
| Rated Voltage | 120 V AC | 230 V AC |
| Power Consumption | 11.5 W | |
| Rated Frequency | 60 Hz | 50 Hz |
| Rated Performance | 5,000 hours | |
| Working Pressure Range | 0 to 20 kPa<br>(0 to 0.2 kgf/cm²)<br>0 to 0.2 bar<br>0 to 2.84 psig | |
| Outlet | 7.5 mm O.D. hose barb | |
| Duty Cycle | Continuous | |
| Coil Insulation Class | Class E equivalent | |
| Mounting Dimensions | 66 (L) x 100 (W) mm<br>2 - 19/32" (L) x 3 - 15/16" (W) | |
| Weight | 0.82 kg<br>1.81 Lbs | |
| Leadwire Length | 300 mm<br>11 - 13/16" | |

A UL approved model for 120 V is available upon request.

## Application Examples

**Massage Devices**

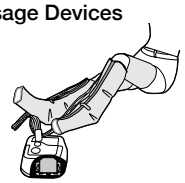

**Bedsore Prevention Mattress**

## External Dimensions (Unit: mm)

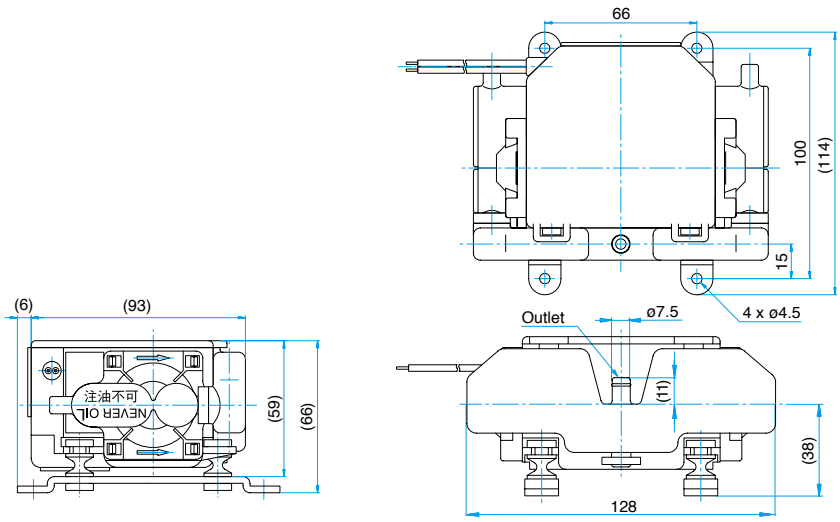

# Compressor and Vacuum Pump

## Model VC0101S

Made to order

### Dual Type

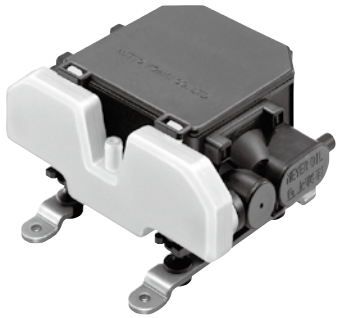

## Airflow & Power Consumption

### Airflow Characteristics

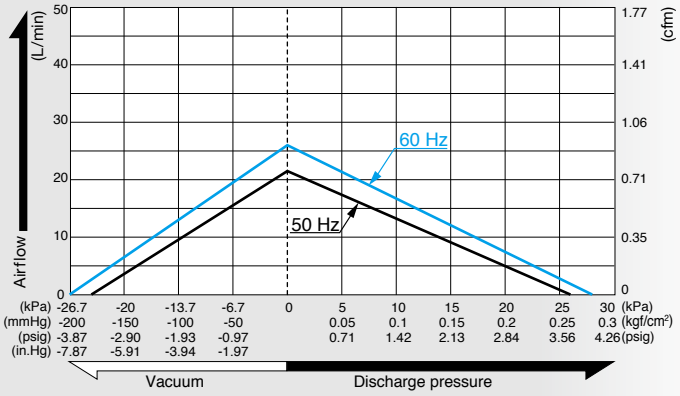


### Power Consumption Characteristics

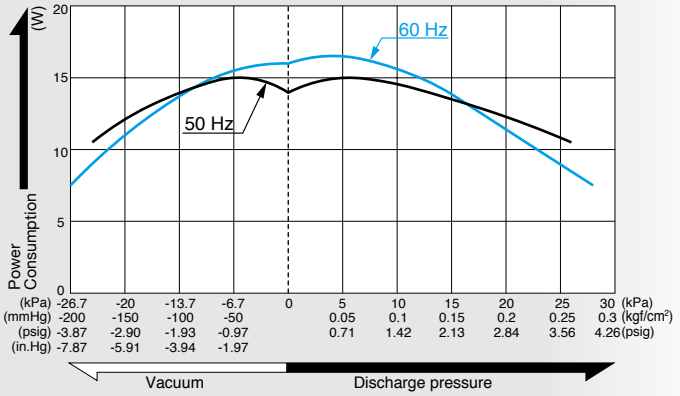


## Specifications

| | | |
|---|---|---|
| Rated Pressure | 5 kPa (0.05 kgf/cm²)<br>0.05 bar<br>0.71 psig | |
| Rated Airflow | 15 L/min<br>0.53 cfm | |
| Maximum Pressure | 26 kPa (0.26 kgf/cm²)<br>0.26 bar<br>3.70 psig | |
| Attainable Vacuum | -24 kPa (-180 mmHg)<br>-240 mbar<br>-7.09 in.Hg | |
| Rated Voltage | 120 V AC *1 | 230 V AC |
| Power Consumption | 15 W | |
| Rated Frequency | 60 Hz | 50 Hz |
| Rated Performance | 5,000 hours | |
| Working Pressure Range | -24 kPa to 26 kPa<br>(-180 mmHg to 0.26 kgf/cm²)<br>-240 mbar to 0.26 bar<br>-7.09 in.Hg to 3.70 psig | |
| Inlet | 7.5 mm O.D. hose barb | |
| Outlet | 7.5 mm O.D. hose barb | |
| Duty Cycle | 60 minutes | |
| Coil Insulation Class | Class B equivalent | |
| Mounting Dimensions | 66 (L) x 100 (W) mm<br>2 - 19/32" (L) x 3 - 15/16" (W) | |
| Weight | 0.82 kg<br>1.81 Lbs | |
| Leadwire Length | 300 mm<br>11 - 13/16" | |

*1: 120 V AC UL version is unavailable.

## Application Examples

**Massage Devices**

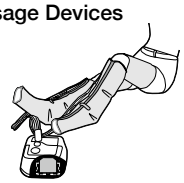

**Bedsore Prevention Mattress**

## External Dimensions (Unit: mm)

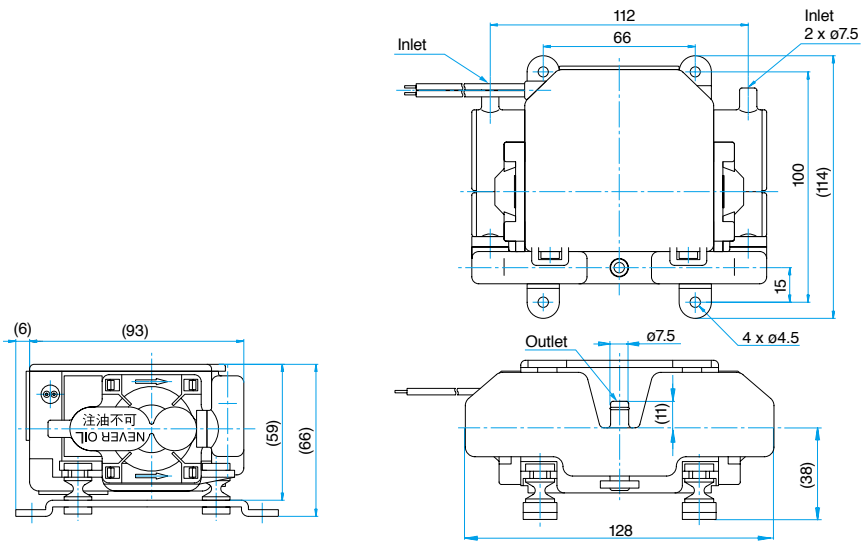

# Blower

## Model LAM-150

Made to order

CE 230 V (50 Hz) UKCA 230 V (50 Hz)

### Airflow Characteristics

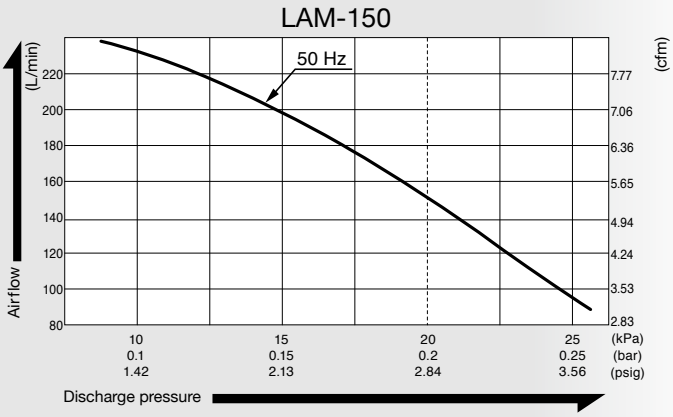


### Specifications

| | LAM-150 |
|---|---|
| Power Supply | 230 V AC |
| Rated Frequency | 50 Hz |
| Power Consumption | 140 W |
| Rated Pressure | 20 kPa (0.2 kgf/cm$^2$)<br>0.2 bar<br>2.84 psig |
| Rated Airflow | 150 L/min<br>5.3 cfm |
| Weight | 12.3 kg<br>27.1 Lbs |

### Optional Hose Assemblies

| LB03965 | LB01070 |
|---|---|
| | |

### Application Examples

Grease Trap

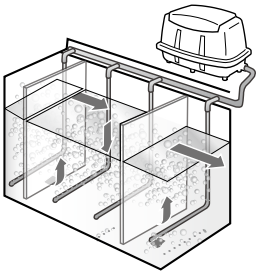

Home Aerobic Sewage Treatment System

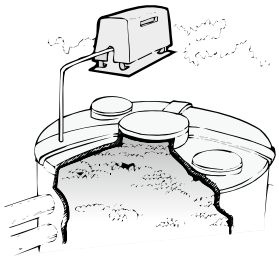

### External Dimensions (Unit: mm)

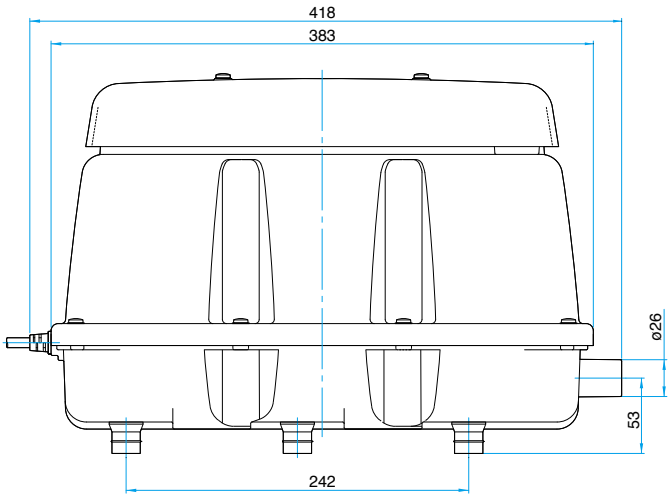


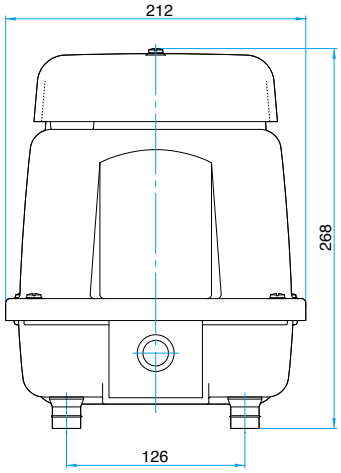

# Piezoelectric Pump

# BIMOR PUMP

Made to order

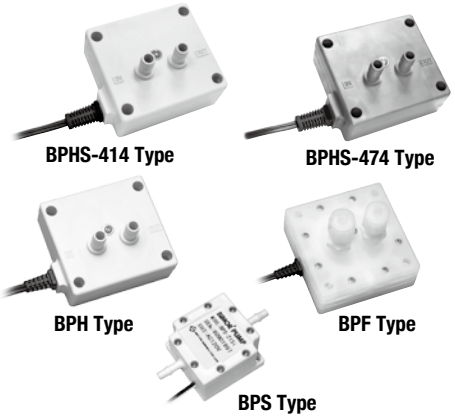


## *Made to order model*

These models are made-to-order models.
Please send a request for quotation to your nearest distributor.

## Specifications

*Please see page 87 for external dimensions.

| Voltage(AC) — 120 V *1 | | | | | Voltage(AC) — 240 V *1 | | | | | Material of Wetted Parts | | | |
|---|---|---|---|---|---|---|---|---|---|---|---|---|---|
| Model | Current (mA) | Self-priming Pressure (kPa)*2 | Flow Rate (mL/min)*2 | Discharge Pressure (kPa) | Model | Current (mA) | Self-priming Pressure (kPa)*2 | Flow Rate (mL/min)*2 | Discharge Pressure (kPa) | Housing | Liquid Contact Sheet | Valve / O-ring | Weight (g) |
| — | — | — | — | — | BPS-215i | 1.8 | 3 | 30 | 15 | PP | PP | IIR | 40 |
| — | — | — | — | — | BPS-235G | 1.8 | 1.5 | 30 | 15 | POM | PTFE | FKM | 40 |
| BPH-214i | 15 | 8 | 350 | 18 | BPH-214i | 7.5 | 8 | 350 | 18 | PP | PP | IIR | 130 |
| — | — | — | — | — | BPH-214D | 7.5 | 8 | 350 | 18 | PP | PP | VMQ | 130 |
| — | — | — | — | — | BPH-414i | 15 | 12 | 500 | 35 | PP | PP | IIR | 140 |
| BPH-414D | 30 | 12 | 500 | 35 | BPH-414D | 15 | 12 | 500 | 35 | PP | PP | VMQ | 140 |
| — | — | — | — | — | BPH-414E | 15 | 12 | 500 | 35 | PP | PP | EPDM | 140 |
| BPH-414G | 30 | 10 | 450 | 32 | BPH-414G | 15 | 10 | 450 | 32 | PP | PTFE | FKM | 140 |
| BPH-474G | 30 | 10 | 400 | 35 | — | — | — | — | — | PPS | PTFE | FKM | 170 |
| BPH-474P | 30 | 10 | 400 | 35 | — | — | — | — | — | PPS | PTFE | FFKM/FEP | 170 |
| — | — | — | — | — | BPHS-414i | 15 | 12 | 700 | 35 | PP | PP | IIR | 160 |
| — | — | — | — | — | BPHS-414E | 15 | 12 | 700 | 35 | PP | PP | EPDM | 160 |
| — | — | — | — | — | BPHS-414G | 15 | 12 | 700 | 35 | PP | PTFE | FKM | 160 |
| — | — | — | — | — | BPHS-474G | 15 | 10 | 500 | 35 | PPS | PTFE | FKM | 180 |
| — | — | — | — | — | BPHS-474P | 15 | 10 | 500 | 35 | PPS | PTFE | FFKM/FEP | 180 |
| BPF-465P | 30 | 10 | 400 | 35 | BPF-465P | 15 | 10 | 400 | 35 | PFA | PTFE | FFKM/FEP | 350 |

*1: The above performance is obtained by using 25°C water at AC frequency 60 Hz. When the pump is used at AC frequency 50 Hz, the flow rate will decrease approximately 20%.
*2: When the liquid temperature is low, the check valve will harden. As a result, the flow rate and the self-priming pressure will decrease.
Especially the flow rate of the pump with fluorine rubber will decrease by half at 5°C, so select with sufficient margin.
Since the flow rate will decrease with highly viscous liquids, please check the flow rate with an actual pump before use.

**Material Description**

EPDM ····· Ethylene Propylene Rubber
FEP ····· Fluoroethylene Propylene
FFKM ····· Perfluoroelastomer
FKM ····· Fluorine Rubber
IIR ····· Butyl Rubber
PFA ····· Fluororesin (Perfluoroalkoxy)
POM ····· Polyacetal
PP ····· Polypropylene
PPS ····· Polyphenylene Sulfide
PTFE ····· Tetrafluororesin (Polytetrafluoroethylene)
VMQ ····· Dimethyl Silicone Rubber

## *Suitable/unsuitable chemical liquids*

| Model | Examples of suitable chemical liquids | Examples of unsuitable chemical liquids |
|---|---|---|
| BPS-215i<br>BPH-214i<br>BPH-414i<br>BPHS-414i | Ethanol,Dilute hydrochloric acid, Sodium carbonate, Benzaldehyde, Formalin | Xylene, Mineral oil, Carbon tetrachloride, Trichloroethylene, Toluene, Benzene |
| BPH-414E<br>BPHS-414E | Ammonia water, Ethanol, Dilute hydrochloric acid, Caustic potash, Caustic soda, Methanol | Xylene, Mineral oil, Carbon tetrachloride, Trichloroethylene, Toluene, Benzene |
| BPS-235G | Ethanol, Xylene,Silicone oil, Kerosene, Toluene, Benzene | Ammonia water, Hydrochloric acid, Hydrogen peroxide, Sodium hypochlorite, Nitric acid, Sulfuric acid |
| BPH-214D<br>BPH-414D | Ammonia water, Ethanol, Sodium hypochlorite, Methanol | Caustic soda, Carbon tetrachloride, Silicone oil, Trichloroethylene, Toluene, Benzene |
| BPH-414G<br>BPHS-414G | Ethanol, Hydrogen peroxide, Mineral oil, Sodium hypochlorite | Acetone, Ammonia water, Glacial acetic acid, Hydrofluoric acid, Formalin |
| BPH-474G<br>BPHS-474G | Ethanol, Xylene, Carbon tetrachloride, Silicone oil, Trichloroethylene | Acetone, Ammonia water, Chlorosulfonic acid, Glacial acetic acid, Hydrofluoric acid, Formalin |
| BPH-474P<br>BPHS-474P | Ethanol, Chloroform, Glacial acetic acid, Benzene, Methyl ethyl ketone | Chlorosulfonic acid, Fluorine oil, CFC 112, CFC 113 |
| BPF-465P | Ethanol, Aqua regia, Ozone, Carbon tetrachloride, Concentrated nitric acid, Concentrated sulfuric acid, Fuming sulfuric acid | Fluorine oil, CFC 112, CFC 113 |

*This chart is for reference only. Please confirm under the operating conditions before use.

# OTHER PRODUCT


| | | Page |
|---|---|---|
| Cutting oil collecting unit | HK-400A | 113 |
| Linicon | LV-125A | 115 |

# Other product: Cutting oil collecting unit

## Model HK-400A

CE 24 V | UKCA 24 V

# The HK-400A collects small amounts of cutting oil that spill from machine tools.

***Compatible with both oil-based cutting oils and water-soluble cutting oils**

- **Install on the side of machines with a magnet.**
- **No air piping required. Save energy by switching from vacuum ejectors.**
- **Comes with a strainer to prevent suction of cutting chips.**
- **Capable of suction of gas & liquid mixture, no worry of motor burns even when idling.**

## Specifications

| | | |
|---|---|---|
| Rated Voltage | | 24 V DC |
| Maximum current (*1, Operating pressure range, Fluid: Water 25°C) | | 450 mA |
| Flow rate (*1, *3, *4, open discharge (0 kPa), Fluid: Water 25°C) | | 400 mL/min<br>0.0141 cfm |
| Operating pressure range (*1, *2, Fluid: Water 25°C) | | 0 to 100 kPa (0 to 1 kgf/cm$^2$)<br>0 to 1 bar<br>0 to 14.2 psig |
| Self-priming pressure (*1, *3, Fluid: Air 20°C) | | 40 kPa<br>0.4 bar<br>5.69 psig |
| Duty cycle (Fluid: Water 25°C) | | Continuous |
| Rated performance (*5) | | 6000 hours (MTTF) |
| Circuit breaker rated current | | 1 A |
| Circuit Breaker Box protection grade | | IP65 |
| Applicable fluid | | Cutting oil (water-soluble and water-insoluble) |
| Recommended fluid viscosity (*4, *6) | | 30 mPa•s or less |
| Place of use | | Indoors |
| External dimensions | | 119 mm (L)×118 mm (W)×81 mm (H)<br>4-11/16"(L) x 4-41/64"(W) x 3-3/16 |
| Weight | Main Body (Pump Unit, Circuit Breaker Box) | 0.6 kg<br>1.32 Lbs |
| | Power Cable | 0.3 kg<br>0.66 Lbs |
| | Strainer Unit | 0.3 kg<br>0.66 Lbs |

## Installation examples

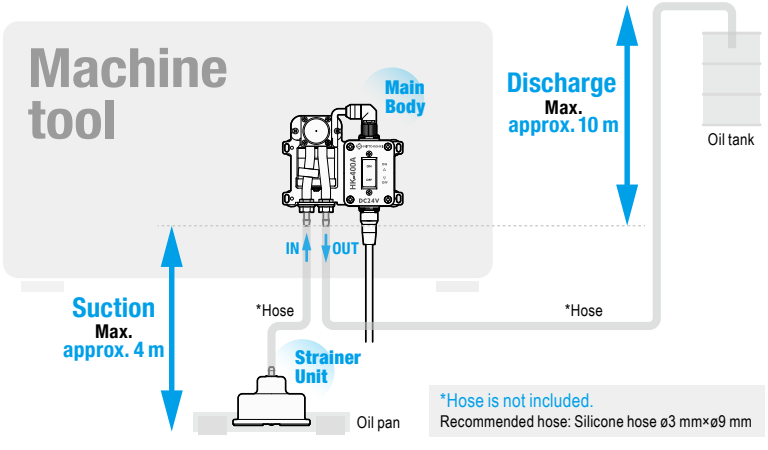


*1: Conditions are for rated voltage, cool unit, and initial operation.
*2: The product cannot be restarted from the closed pressure state or used beyond the working pressure range.
*3: When the fluid reaches a low temperature, the check valve hardens and the flow rate and self-suction power will decrease.
*4: When highly viscous cutting oil (2 mPa•s or more) is collected, the flow rate decreases. Especially when using with water-insoluble cutting oil, the fluid viscosity fluctuates significantly according to temperature change, so check whether the pump can be used under actual operating conditions.
*5: Rated performance (MTTF: Mean Time to Failure) is the mean value of the accumulated operating time at the rated voltage, open discharge (0 kPa) and water temperature of 25°C and when the flow rate becomes 80% (320 mL/min) or less of the specified value.
The rated performance varies depending on the operating conditions (operating pressure, operating fluid temperature, operating fluid viscosity, operating environment, etc.).
*6: Refer to the following formula for conversion from kinematic viscosity [mm2/s] to viscosity [mPa•s].
Viscosity [mPa•s] = Kinematic viscosity [mm2/s] × Density [g/cm3]
(Kinematic viscosity: 1 mm2/s = 1 cSt  Viscosity: 1 mPa•s=1 cP)

## Cutting oil collecting capability

*Refer to the characteristic diagram and conversion formula below and consider whether the product can be used or not.

### Viscosity vs. Flow Rate Characteristics

- Input power... 24 V DC Brown wire: +24 V Blue wire: GND
- Piping conditions... Silicone hose Inner diameter: ø3 mm, length: 4 m No lifting load

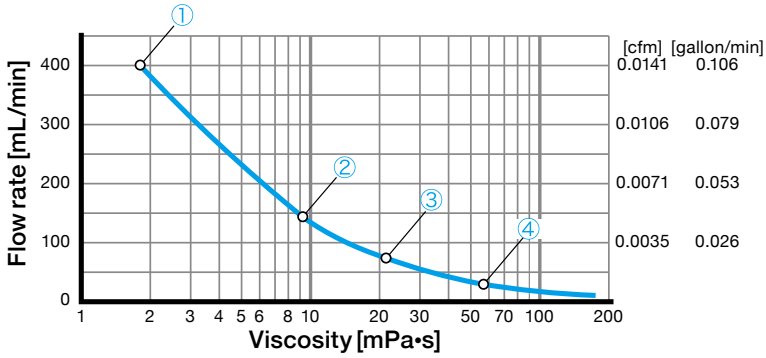


| | Liquid type | Kinematic viscosity [cSt] [mm²/s] (40˚C) | Viscosity [mPa•s] (24±1˚C) | Flow rate [mL/min] (24±1˚C) |
|---|---|---|---|---|
| ① | Water | – | 1.9 | 400 |
| ② | Sample A | 7.0 | 9.4 | 145 |
| ③ | Sample B | 15.0 | 21.9 | 74 |
| ④ | Sample C | 32.5 | 56.8 | 27 |

**Viscosity conversion formula**

Viscosity [mPa•s] = Kinematic viscosity [mm²/s] × Density [g/cm³]

(Kinematic viscosity: 1 mm²/s = 1 cSt Viscosity: 1 mPa•s = 1 cP)

- Viscosity is measured with the digital viscometer VISCO Low Viscosity Sample Adapter (ULA) manufactured by Atago Co., Ltd.
- Refer to the above formula for conversion from kinematic viscosity to viscosity. For the kinematic viscosity and density of the cutting oil used, contact the cutting oil manufacturer.
- Characteristic diagrams are for reference only and are not guaranteed values.
- The above performance may not be attained depending on the operating conditions (operating environment, liquid type, piping material). Especially when using water-insoluble cutting oil, the fluid viscosity fluctuates significantly depending on the temperature change, so please judge whether the pump can be used or not under actual operating conditions.

## List of replacement parts

| Part Name | Part No. | |
|---|---|---|
| Pump Unit | LB09133 | |
| Filter Unit | LB09141 | |
| Power Cable (5 m) | LB09140 | |
| Strainer Unit [Components] Strainer, Filter Unit, Screw Wire Mesh, Filter Cover | LB09134 | |

| Part Name | Part No. | |
|---|---|---|
| Inline Filter | LB09137 | |
| Filter Cover [Components] Filter Cover, Screw | LB09139 | |
| Circuit Breaker Box | LB09608 | |
| Wire Mesh | LB09138 | |

## Optional accessory

| Part Name | Part No. | |
|---|---|---|
| Silicone Hose (ø3×ø9×4000 mm) | LB09135 | |

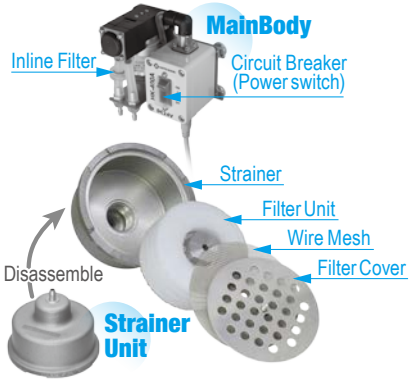


## External Dimensions (Unit : mm)

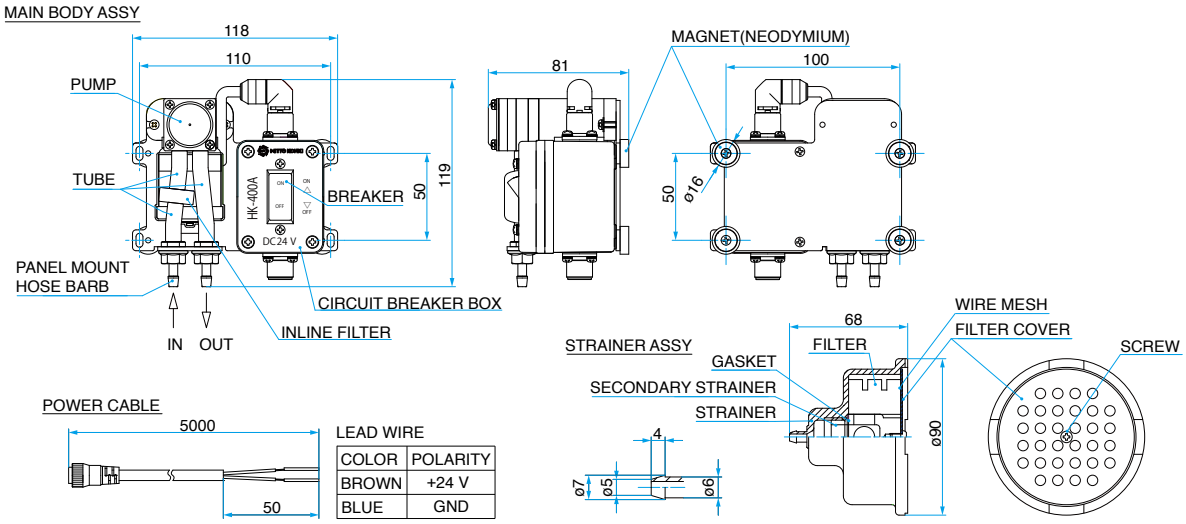

# Other product: Linicon (Vacuum Pump)

## Model LV-125A

CE 230 V | UKCA 230 V

**Oil-less Compressor**

- **AC linear free piston vacuum pump**
- **Equipped with fuse and removable power cable**
- **Compact and lightweight**
- **Low noise level**
- **Oil-less construction**

### Specifications

| | | |
|---|---|---|
| Rated Voltage | 115 V AC | 230 V AC |
| Power Consumption | 14 W | 15 W |
| Rated Frequency | 60 Hz | 50 Hz |
| Maximum Vacuum | -33.3 kPa (-250 mm Hg, -333 mbar, -9.84 in. Hg) | |
| Dimensions | 135 (L) x 91 (W) x 146 (H) mm (5 - 5/16" x 3 - 37/64" x 5 - 3/4") | |
| Duty Cycle | Continuous | |
| Coil Insulation Class | B or its equivalent | E or its equivalent |
| Weight | 1.5 kg (3.3 Lbs) | |

### Vacuum Pick-Up Set

If the following options are prepared together with Model LV-125A, the Vacuum Pick-Up Set can be arranged.

① LB07629 Vacuum pen assembly
② LQ01267 Tube 3 x 5 x 2000
③ LA71242 Needle 1 x 1.5 x 40 (6 pcs/set)
④ LA71251 Pad 6 mm dia.
⑤ LA71249 Pad 4 mm dia.
⑥ LA71143 Pen stand

The needle can be bent in accordance with applications.
***LA71069 P-100 includes ① - ⑤**

### High Adsorption Power

In the case that the depth of vacuum is -33.3 kPa (-250 mmHg) and the surface to be vacuumed is flat.

| Pad Diameter | A<br>Suction power when the adsorption face is placed horizontally and moved upward. | B<br>Suction power when the adsorption face is placed vertically and moved laterally. |
|---|---|---|
| 4 mm | 20 g | 10 g |
| 6 mm | 50 g | 25 g |

Adsorption power: W (g) = $D^2$ x 7.85 x 250/736

**A** is calculated by multiplying the safety rate of 0.5 to the above equation, and then rounded.

**B** is calculated by multiplying the safety rate of 0.25 to the above equation, and then rounded.

### Application Examples

Transferring spherical objects such as balls

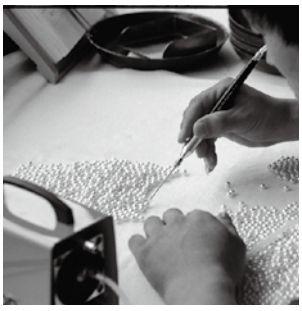

Assembling precision parts

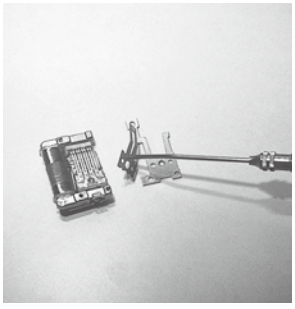

Moving tiny parts

Transferring uneven parts

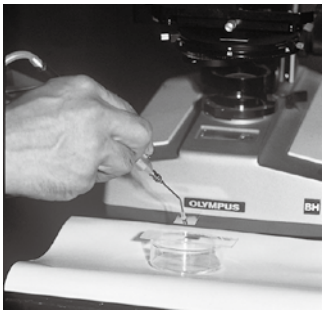


Most suitable for handling electronic parts such as ICs and LSIs. Also small parts, micro parts such as those in watches and chemicals.

# Safety Guide

**Be sure to carefully read the following precautions and the operation manual that comes with the product before use.**

## Precautions for Compressors and Vacuum Pumps

**⚠ CAUTION**

**⚠ WARNING** **Do not let the unit draw in or discharge any gas other than air.** This may cause an explosion, fire or electric shock.

**Avoid drawing in water and splashing any water on the unit.** Otherwise there is the risk of a short circuit causing a fire or electric shock.

| | | | |
|---|---|---|---|
| **The unit must be incorporated into a device that has an appropriate case and wiring.** Not doing so may cause a fire, electric shock or burns. | | **Avoid any strong impact to the unit as this may reduce the performance and durability of the unit.** | |
| **Do not use the unit with a power supply other than the voltage shown on the unit.** Doing so may cause a fire or electric shock. | **Do not install the unit in a completely enclosed case (box) without proper or adequate ventilation.** This may cause a fire or electric shock. | **Use the unit within the proposed ambient temperature range.** Using it out of the range may cause a fire or electric shock. | **Units must not be modified.** Modifications may cause a fire or electric shock. |
| **Do not place combustible materials near the unit.** This may cause a fire. | **The grounding screw of the unit should be utilized, except when connected to a double insulation device.** Not grounding the unit may result in a fire or electric shock. | **The unit must be installed at a level higher than the water surface when it is used for bubbling.** If the unit is installed at a level lower than the water surface, fluid may flow into the unit and cause an electric shock. | **Do not allow anything to be placed on or to fall onto the lead wires.** This may damage them and cause a fire or electric shock. |
| **Do not pull, scratch, forcefully bend, twist or heat the lead wires.** This may damage them and cause a fire or electric shock. | **When incorporating the unit into a device, the lead wires from the unit should be connected securely to the wiring of the device by means of soldering, crimping or by the use of screws.** Insufficient connections may cause a fire or electric shock. | **The unit must not be disassembled or repaired by anyone other than a person who has received Nitto Kohki technical training. (Except in the case of filter and piston maintenance and inspection in accordance with the operation manual.)** Otherwise it may result in a fire or electric shock. | **The unit must be disconnected from its power source before cleaning or replacing filters.** Failure to do so may result in an electric shock or injury. |
| **When drawing in air contaminated with moisture, powder, or dust, add an external device to the unit for removing them.** If these contaminants are drawn in, it may cause an electric shock. *Only for vacuum pumps. | | | |

## Precautions for Blowers

**⚠ CAUTION**

**⚠ WARNING** **Do not let the unit draw in or discharge any gas other than air.** This may cause an explosion, fire or electric shock.

| | | | |
|---|---|---|---|
| **Do not install the unit in a place where it may be soaked with water or covered with snow.** This may cause an electric shock or fire. | **Do not use the unit in hot and humid conditions.** This may cause an electric shock, breakdown or fire. | **Always place the unit above water level.** Failure to do so may result in an electric shock or breakdown. | **Use a waterproof wall outlet to supply power to the unit.** Failure to do so may cause an electric shock or fire. |
| **Use a power supply equipped with a ground-fault interrupter and overcurrent breaker.** Failure to do so may cause an electric shock or fire. | **Have a qualified electrician do the electrical work.** Failure to do so may cause an electric shock or fire. | **Never modify the unit.** This may cause an electric shock, breakdown, or fire. | **Do not use the unit with the outlet port closed or at free displacement.** This may cause an electric shock, breakdown, or fire. |
| **The power supply voltage must be limited to the individual unit specifications as stated on the nameplate or instruction manual.** Failure to do so may cause an electric shock or fire. | **Never touch the power plug with wet hands.** This may cause an electric shock. | **Insert the power plug securely into the innermost position.** Failure to do so may cause an electric shock. | **Do not put anything on the power cable.** Doing so may cause a fire or electric shock. |
| **Do not place anything near the unit (within about 50 cm).** Doing so may cause an electric shock or fire. | **Do not use the unit in a place where flammable materials, such as gasoline, thinner, lacquer, benzene, etc. are being used.** This may cause a fire or explosion. | **Check the power plug at least once a year for dirt and dust and clean if necessary.** Failure to do so may result in an electric shock or fire. | **The power plug must be disconnected before the air filter is cleaned or replaced.** Failure to do so may cause an electric shock or accident. |
| **Always grasp the power plug to disconnect the unit from the socket.** Pulling it out by the cord may cause an electric shock or breakdown. | **Any removed air filter must be replaced before the operation is resumed.** Failure to do so may cause an electric shock or breakdown. | **Never try to disassemble or repair the unit.** This may cause an electric shock, breakdown, fire or injury. Any repairs must be done by an electrician authorized by Nitto distributors. | **Do not cover the Blower with a box or the like without proper or adequate ventilation.** Doing so may cause a breakdown or fire. |

## Precautions for DC-Motor Pumps

**Connect the plus terminal (If there is no indication of the plus terminal, use the terminal with a red mark as the plus terminal.) or the red lead wire of the unit to the plus terminal of the DC power source. Reverse connection may cause a breakdown, malfunction, or reduced rated performance.**

## Precautions for Liquid Pumps

**⚠ CAUTION**

**⚠ WARNING** **Confirm the suitability of the liquid that passes through the unit before use.** Failure to do so may cause a leak, explosion, fire or electric shock.

| | | |
|---|---|---|
| **Avoid any liquid contaminated with solids such as debris or dust.** If dust or debris sticks to the valve, the unit may not perform properly. When the intrusion of dust or debris is expected, be sure to place a filter on the inlet side of the unit. | **Avoid any liquid that may crystallize.** If crystals stick to the valve, the unit may not perform properly. A preliminary test on the unit with the liquid to be used is recommended. | **The performance of the unit is measured with the pump in its proper mounting position, which is described in the user's manual. Different mounting positions or nozzle directions may result in different performances.** |
| | | **There may be a risk that even a slight liquid pressure can open the valve due to siphon phenomenon. Place the outlet port at a position higher than the water level in the supply tank, or install a check valve if necessary to prevent water from being siphoned into the pump.** |

## When Using Compressors and Vacuum Pumps

**Check with our distributor in advance if you plan to use the compressor/vacuum pump at free displacement (0 kPa), or the vacuum pump with inlet port closed, or the compressor at maximum pressure.**

As compressors and vacuum pumps employ a self-cooling system, if the units are used at more than the rated pressure, the duty cycle of some of the models will need to be shortened.

- When wanting to increase the duty cycle, it is recommended to use a fan to cool the compressor.
- Do not use the compressor near flammable liquid gas.
- Do not use the compressor in the rain or in wet and damp places.
- Do not allow the pump to draw in corrosive gas.
- Be sure to install and use the compressor at a position higher than water level.

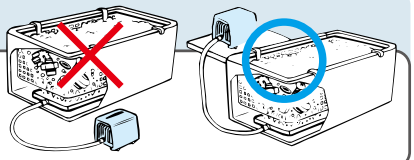

## Handling Problems

**In any of the below cases, stop operation immediately, switch off the power and disconnect the unit from the power supply. Ask our distributor for repair.**

- When oil such as a lubricant has been applied to the unit in error.
- When the unit has suffered a severe impact such as being dropped.
- When liquid such as water has entered into the unit by mistake.
- When an abnormal operation is observed, such as the emission of smoke, or an unusual smell or noise.

## Precautions for Pumps with Brush Motor

**As operational time is increased, the value of insulation resistance becomes lower than that of the initial insulation resistance.**
**If the outer surface of motor and the grounding of the power source are connected, do a preliminarily check to assure no issues occur.**

# Our Product Warranty

**Our Products are covered by a limited warranty ("Warranty") under the following conditions.**
**1. Duration: depends on individual products and their specifications**
**2. Service: repair or replacement at our option**
**Please be aware that a warranty claim will not be reimbursed with a cash payment.**
**3. Object Person: original purchaser from our designated distributors**

**4. Out of Warranty**
**The following conditions are not covered by Warranty**
- purchaser improperly used our products.
- purchaser did not comply with specifications and instructions stipulated in this Catalog when using our products, or
- purchaser did not comply with Caution for Safety stipulated in this Catalog when using our products, or
- repairing of our products was done by someone other than us, or
- We are not able to anticipate or predict such defects or causes of failure based on general technical knowledge of the specific application before or at the time of shipment, or
- defects are caused by the force majeure or other situations not attributable to us, or
- defects are not clearly attributable to us and
- defects are not about design, material or workmanship.

# Limitation of Liability

**We, including designated distributors, will not be liable for any special damages or consequential damages and will not have any monetary liability to purchasers.**

# CUPLA

*CUPLA, Quick Connect Couplings, Enable Flexible, Fast, and Secure Connections in Various Fluid Lines.*

## PLASTIC CUPLA BC Type Valveless

**For low pressure air piping**

| Working pressure | Valve structure | Applicable fluid |
|---|---|---|
| 0.07 MPa {0.7 kgf/cm²} | Straight through | Air |

- To connect, just push the plug into the socket.
- Plastic makes this ideal for use in environment prone to rusting.
- Compact and light weight for easy handling.
- Valveless construction gives more stable flow.

## CUBE CUPLA

**Small and lightweight coupling for air supply lines to medical and/or scientific equipment**

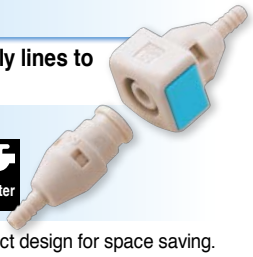

| Working pressure | Valve structure | | | Applicable fluids | |
|---|---|---|---|---|---|
| 0.07 MPa {0.7 kgf/cm²} | Two-way shut-off | One-way shut-off | Straight through | Air | Water |

- Ultra-lightweight, made of polyacetal resin. Compact design for space saving.
- Just push plug into socket for connection. Simply press the button on the socket for disconnection.
- Both socket and plug have built-in valve types and valveless types. Valveless structure suits high viscosity fluids.
- Suitable for a wide range of applications from medical/scientific equipment to beverage machines or semiconductor manufacturing devices.

## MICRO CUPLA

**For piping in pneumatic control devices**

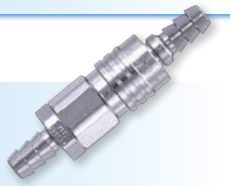

| Working pressure | Valve structure | Applicable fluids | |
|---|---|---|---|
| 1.0 MPa {10 kgf/cm²} | One-way shut-off | Air | Water |

- Even though the valve is built in the socket, the sleeve outer diameter is confined to 9.5 mm.
- Compact design for piping in narrow spaces.
- Push-to-connect operation. Tube Fitter type for even easier tube insertion.
- Plated brass and stainless bodies are available for excellent corrosion resistance.
- Available in various end configurations to satisfy a wide range of pneumatic applications.

## SMALL CUPLA

**Lightweight and compact for use on air lines and scientific equipment**

| Working pressure | Valve structure | Applicable fluids | |
|---|---|---|---|
| 0.7 MPa {7 kgf/cm²} | One-way shut-off | Air | Water |

- Compact socket with built-in valve and 14 mm OD sleeve.
- Just push in the plug to the socket for connection.
- Also available with quick connect/disconnect Tube Fitter type.
- Chrome-plated brass for corrosion resistance adopted for the body.
- Available in various end configurations to satisfy a wide range of pneumatic applications.

## SUPER CUPLA

**Light, compact for air piping connections**

| Working pressure | Valve structure | Applicable fluid |
|---|---|---|
| 1.0 MPa {10 kgf/cm²} | One-way shut-off | Air |

- Lightweight design suits direct connection to power tools.
- Push-to-connect for easy operation.
- Also available with quick connect/disconnect Tube Fitter type.
- Chrome-plated steel for corrosion resistance adopted for the body. (Partly aluminum)
- Available in various end configurations for a wide range of pneumatic applications.

## HI CUPLA 200

**Push-to-connect type for air lines**

| Working pressure | Valve structure | Applicable fluid |
|---|---|---|
| 1.5 MPa {15 kgf/cm²} | One-way shut-off | Air |

- Just push the plug into the socket for simple and secure connection.
- New valve design for low pressure loss to achieve flow rate increase (15% up over the conventional model).
- End-face seal is achieved when connected.
- Enhanced operability with low connection resistance.
- End-face seal design is superior to external seal with an O-ring due to no seal damage caused by exhausted lubrication.
- Also available with quick connect/disconnect Tube Fitter type.

## HI CUPLA

**Universal purpose couplings for air lines**

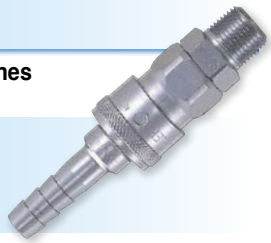

| Working pressure | | Valve structure | Applicable fluids (Steel applies to air only) | |
|---|---|---|---|---|
| 1.5 MPa {15 kgf/cm²} | 1.0 MPa {10 kgf/cm²} | One-way shut-off | Air | Water |

- An excellent general purpose coupling for connecting factory air supply to pneumatic tools.
- Steel CUPLA is suitable for air. Brass or stainless steel is suitable for water.
- Critical structural parts of steel models are heat-treated for increased strength giving greater durability and resistance to wear.
- Available in various body materials, sizes and end configurations applicable to a wide range of applications.

## HI CUPLA ACE

**Lightweight plastic coupling with automatic safety lock for air line applications**

| Working pressure | Valve structure | Applicable fluids | |
|---|---|---|---|
| 1.5 MPa {15 kgf/cm²} | One-way shut-off | Air | Water |

- Pressure ratings comparable to steel CUPLA.
- A built in “automatic lock mechanism” locks the sleeve upon connection, thus prevents accidental disconnection.
- Just push plug into socket for simple connection.
- The weight is a quarter of steel HI CUPLA for easy handling.
- Can be used for air and water.

For more information, please visit **http://www.nitto-kohki.co.jp/e/prd/d_cat/** and see our eCatalog here.

# Air Compressor, Vacuum Pump & Liquid Pump

Japanese
www.nitto-kohki.co.jp/network/jp/

Vietnamese
www.nitto-kohki.co.jp/network/vi/

English
www.nitto-kohki.co.jp/network/

Indonesian
www.nitto-kohki.co.jp/network/id/

Thai
www.nitto-kohki.co.jp/network/th/

Spanish
www.nitto-kohki.co.jp/network/es/

YouTube
www.youtube.com/c/NittoKohkiGLOBAL

eCatalog
www.nitto-kohki.co.jp/e/prd/d_cat/

# NITTO KOHKI CO., LTD.


## Head Office

9-4, Nakaikegami 2-chome, Ohta-ku, Tokyo 146-8555, Japan
Tel : +81-3-3755-1111 Fax : +81-3-3753-8791 E-mail : overseas@nitto-kohki.co.jp
**Web www.nitto-kohki.co.jp/e/**


ISO9001
JQA-2025
ISO14001
JQA-EM4057
H.Q./R&D Lab

## Overseas Affiliates / Offices


**NITTO KOHKI U.S.A., INC.**
46 Chancellor Drive, Roselle, Illinois 60172, U.S.A.
For Pump
Tel : +1-630-924-8811 Fax : +1-630-924-0808
For CUPLA
Tel : +1-630-924-5959 Fax : +1-630-924-1174
For Tool
Tel : +1-630-924-9393 Fax : +1-630-924-0303
www.nittokohki.com/

**NITTO KOHKI EUROPE GMBH**
Gottlieb-Daimler-Str. 10, 71144 Steinenbronn, Germany
Tel : +49-7157-989555-0 Fax : +49-7157-989555-40
www.nitto-kohki.eu/

**NITTO KOHKI EUROPE GMBH UK Branch**
Unit A5, Langham Park Industrial Estate, Maple Road,
Castle Donington, Derbyshire DE74 2UT, United Kingdom
Tel : +44-1332-653800 Fax : +44-1332-987273
www.nitto-kohki.eu/

**NITTO KOHKI CO., LTD. Bangkok Representative Office**
2 Jasmine Building, 22nd Floor, Soi Prasarnmitr(Sukhumvit23),
Sukhumvit Road, North Klongtoey, Wattana, Bangkok 10110, Thailand
Tel : +66-2612-7388
Thai www.nitto-kohki.co.jp/network/th/
Vietnamese www.nitto-kohki.co.jp/network/vi/

**NITTO KOHKI CO., LTD. India Liaison Office**
14th Floor, Tower 5B, DLF Epitome, DLF Cyber City, Phase 3, Gurugram,
Haryana 122002, India
Tel : +91-124-460-7701
www.nitto-kohki.co.jp/network/

**NITTO KOHKI CO., LTD. Singapore Branch**
18, Kaki Bukit Road 3, #02-12, Entrepreneur Business Centre, Singapore 415978
Tel : +65-6227-5360 Fax : +65-6227-0192
www.nitto-kohki.co.jp/network/

**NITTO KOHKI CO., LTD. Indonesia Representative Office**
Centennial Tower 35th Floor Jl. Jend. Gatot Subroto Kav. 24-25,
Jakarta 12930, Indonesia
Tel : +62-21-2953-9500
www.nitto-kohki.co.jp/network/id/

**NITTO KOHKI AUSTRALIA PTY LTD**
77 Brandl Street, Eight Mile Plains, Queensland 4113, Australia
Tel : +61-7-3340-4600 Fax : +61-73340-4640
www.nitto-australia.com.au/

**NITTO KOHKI (SHANGHAI) CO., LTD.**
Room1506, Suite C, Orient International Plaza,
No.85 Loushanguan Road, Shanghai 200336, China
Tel : +86-21-6415-3935 Fax : +86-21-6472-6957
www.nitto-kohki.cn/

**NITTO KOHKI (SHANGHAI) CO., LTD. Shenzhen Branch**
2005C Shenzhen ICC Tower, Fuhuasanlu 168,
Futian District, Shenzhen, Guangdong 518048, China
Tel : +86-755-8375-2185 Fax : +86-755-8375-2187
www.nitto-kohki.cn/


**DISTRIBUTED BY**


Specifications and designs are subject to change at any time without notice.
The contents of this catalog are current as of January 2022.